Menu

PENTAIR

HYPRO®

# Series 9300 Hydraulically-Driven Centrifugal Pumps

Form L-1526
(12/12, Rev. B)

# Installation, Operation, Repair and Parts Manual

## Description

Hypro centrifugal pumps are designed for agricultural and industrial spraying and transfer of a variety of fluids: water, insecticides, herbicides, wettable powders, emulsives, liquid fertilizers, etc. Polypropylene centrifugal pumps may also be used to pump acid fertilizer, calcium chloride and other highly corrosive liquids such as sulfuric and phosphoric acids.

Hypro Series 9300 hydraulic motor-driven centrifugal pumps provide smooth performance. They can be conveniently mounted on the tractor or sprayer, becoming part of the vehicle's hydraulic system and freeing the PTO for other uses. The Hypro "close-coupled" design reduces the mounting space required, eliminating long shafts and couplers between the pump and motor.

**SERIES 9302C & 9302S**
**Cast Iron & Stainless Steel Centrifugal Pumps**

**Max. Flow Rate:** ..... 100 gpm
**Max. Pressure:** .....120 psi
**Ports:** .....1-1/4" NPT Inlet
..... 1" NPT Outlet
**Hydraulic Ports:**..... 1/2" NPT Inlet
.....3/4" NPT Tank

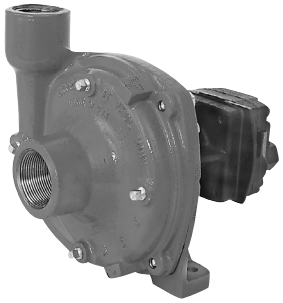

**SERIES 9303C & 9303S**
**Cast Iron & Stainless Steel Centrifugal Pumps**

**Max. Flow Rate:** ..... 147 gpm
**Max. Pressure:** .....145 psi
**Ports:** .....1-1/2" NPT Inlet
..... 1-1/4" NPT Outlet
**Hydraulic Ports:**..... 1/2" NPT Inlet
.....3/4" NPT Tank

**SERIES 9303P**
**Polypropylene Centrifugal Pumps**

**Max. Flow Rate:** ..... 113 gpm
**Max. Pressure:** .....125 psi
**Ports:** .....1-1/2" NPT Inlet
..... 1-1/4" NPT Outlet
**Hydraulic Ports:** ..... 1/2" NPT Inlet
.....3/4" NPT Tank

**SERIES 9303C-SP**
**Cast Iron Centrifugal Pumps**

**Max. Flow Rate:** ..... 122 gpm
**Max. Pressure:** .....140 psi
**Ports:** .....1-1/2" NPT Inlet
..... 1-1/4" NPT Outlet
**Hydraulic Ports:**..... 1/2" NPT Inlet
.....3/4" NPT Tank

**SERIES 9305C-HM3C**
**Cast Iron Centrifugal Pumps**

**Max. Flow Rate:** ..... 190 gpm
**Max. Pressure:** .....180 psi
**Ports:** .....2" NPT Inlet
..... 1-1/2" NPT Outlet
**Hydraulic Ports:**..... 1/2" NPT Inlet
.....3/4" NPT Tank

**SERIES 9305C-HM3C-SP, -BSP**
**Cast Iron Centrifugal Pumps**

**Max. Flow Rate:** ..... 178 gpm
**Max. Pressure:** .....154 psi
**Ports:** .....2" NPT or BSP Inlet
.....2" NPT or BSP Outlet
**Hydraulic Ports:**..... 1/2" NPT Inlet
.....3/4" NPT Tank

**SERIES 9306C & 9306S**
**Cast Iron & Stainless Steel Centrifugal Pumps**

**Max. Flow Rate:** ..... 214 gpm
**Max. Pressure:** .....150 psi
**Ports:** .....2" NPT Inlet
..... 1-1/2" NPT Outlet
**Hydraulic Ports:** ..... 1/2" NPT Inlet
.....3/4" NPT Tank

## General Safety Information

⚠ **California Proposition 65 Warning -- This product and related accessories contain chemicals known to the State of California to cause cancer, birth defects or other reproductive harm.**

**NOTE**

**Notes are used to notify of installation, operation, or maintenance information that is important but not safety related.**

**⚠ CAUTION**

**Caution is used to indicate the presence of a hazard, which will or may cause minor injury or property damage if the notice is ignored.**

**⚠ WARNING**

**Warning denotes that a potential hazard exists and indicates procedures that must be followed exactly to either eliminate or reduce the hazard, and to avoid serious personal injury, or prevent future safety problems with the product.**

**⚠ DANGER**

**Danger is used to indicate the presence of a hazard that will result in severe personal injury, death, or property damage if the notice is ignored.**

**⚠ DANGER**

**Do not pump flammable or explosive fluids such as gasoline, fuel oil, kerosene, etc. Do not use in explosive atmospheres. Components not rated for use with Anhydrous Ammonia. The pump should be used only with liquids compatible with the pump component materials. Failure to follow this notice may result in severe personal injury and/or property damage and will void the product warranty.**

**⚠ CAUTION**

1. **Do not pump at pressures higher than the maximum recommended pressure.**
2. **Maximum liquid temperature is 140° F for Series 9300 centrifugal pumps.**
3. **Disconnect power before servicing.**
4. **Release all pressure within the system before servicing any component.**
5. **Drain all liquids from the system before servicing any component. Flush with water.**
6. **Secure the outlet lines before starting the pump. An unsecured line may whip, causing personal injury and/or property damage.**
7. **Check hose for weak or worn condition before each use. Make certain that all connections are tightly secured.**
8. **Periodically inspect the pump and the system components. Perform routine maintenance as required (See Repair Instructions).**
9. **Use only pipe, hose and fittings rated for the maximum psi rating of the pump.**
10. **Do not use these pumps for pumping water or other liquids for human or animal consumption.**

## Hazardous Substance Alert

**⚠ CAUTION**

1. **Always drain and flush pump before servicing or disassembling for any reason.**
2. **Always drain and flush pumps prior to returning unit for repair.**
3. **Never store pumps containing hazardous chemicals.**
4. **Before returning pump for service/repair, drain out all liquids and flush unit with neutralizing liquid. Then, drain the pump. Attach tag or include written notice certifying that this has been done. It is illegal to ship or transport any hazardous chemicals without United States Environmental Protection Agency Licensing.**

**⚠ DANGER**

**Never use your hand to check the condition of hydraulic lines or hoses. If hydraulic fluid penetrates the skin, get medical help immediately. Failure to get proper medical help may result in loss of limb or life. The safest way to check hydraulic lines or hoses is by holding a piece of cardboard next to the hydraulic line or hose.**

**⚠ WARNING**

**The sound pressure level of the pump is 80dBA. Observe all safety precautions when operating the pump within close proximity for extended periods of time by wearing hearing protectors. Extended exposure to elevated sound levels will result in permanent loss of hearing acuteness, tinnitus, tiredness, stress, and other effects such as loss of balance and awareness.**

### Hydraulic Pumps

Hydraulic pumps come in two basic types:

- **Constant displacement -** which will continue to put out its rated flow regardless of pressure, until the relief valve bypasses the flow.
- **Variable displacement -** which will produce only the flow needed by the implement until the total pump output is reached. If less than the full pump output is required, an automatic stroke control mechanism decreases the pump output to maintain a constant pressure and flow. The output varies according to demand.

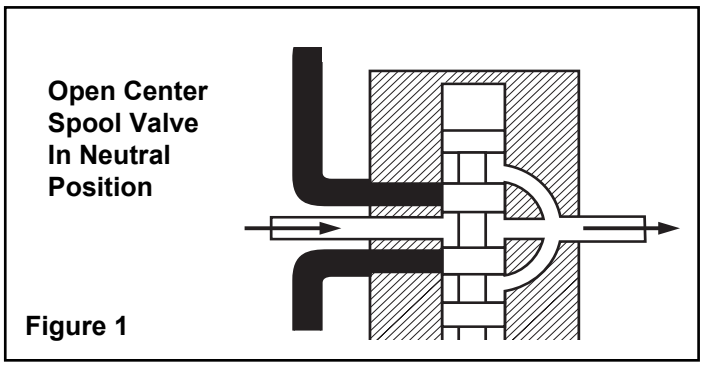


Figure 1

### Spool Valves

There are two basic types of spool valves used in conjunction with these pumps — Open and Closed Center. In the Open Center Valve (See Figure 1), the flow goes straight through the valve when in the neutral position. This type is used for constant displacement pumps where the flow should never be shut off.

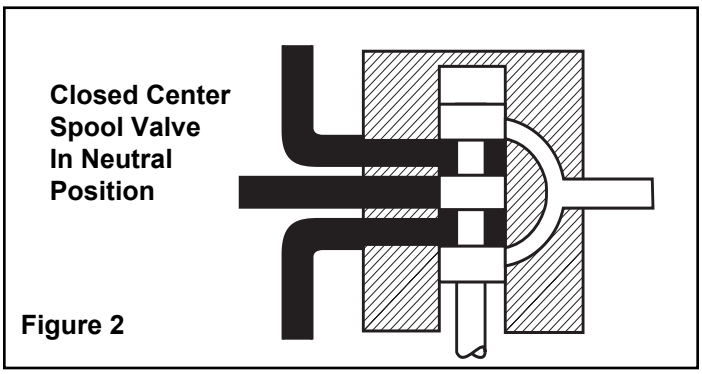


Figure 2

The Closed Center Valve (See Figure 2) is used with variable displacement pumps. The flow is completely shut off in the neutral position, causing the pump stroke to adjust to zero flow. The flow stops, but the pump maintains a static pressure up to the valve.

### Hydraulic Motors

Figure 3 shows an internal gear motor (Gerotor) where pressure causes the cavities between the gears to expand on one side, developing torque. The Gerotor type of hydraulic motor is used on Hypro pumps for its superior performance characteristics, including cooler running and higher rpm capabilities.

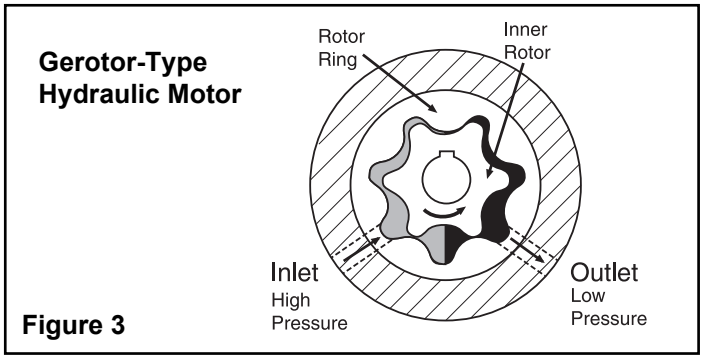


Figure 3

### Three Systems

Fitting these components together and installing a motor, we have one of the three types of systems: Open Center, Closed Center (pressure compensated) and Closed Center Load Sensing (flow and pressure compensated).

### Open Center Systems

In an Open Center System, the hydraulic pump puts out a constant flow. If the pump puts out more oil than the motor can use, a portion of the oil must be bypassed around the motor. When the oil is bypassed around a loop and does no work, the energy put into it by the pump turns into heat. Therefore, the amount of oil bypassed should be kept to a minimum. Use the largest motor possible.

### Closed Center (Pressure-Compensated) Systems

The Closed Center Pressure-Compensated system has a variable displacement pump which will deliver flow at the necessary rate to maintain a specified pressure. It is desirable to equip implements with a motor of a low flow range that will cause the pump to operate between 1800 and 2100 psi [124 and 145 BAR]. A motor that requires a large volume to obtain the correct implement speed usually causes the hydraulic pump in a closed center system to operate at a lower pressure than desirable. This low pressure results in unnecessary flow and the generation of heat that lowers the lubricating quality of the oil and may damage transmission parts. Use the smallest motor possible.

### Closed Center Load Sensing Systems (Flow and Pressure-Compensating)

The Closed Center Flow-Compensated System is a variation of the pressure-compensated system, designed primarily for more efficient operation and the generation of less heat. It works on the principle of maintaining a constant pressure drop from the pump to the work port of the selector valve. Any variation in demand at the motor will cause a change in flow. The system senses this change in flow due to the change in pressure drop across the valve and causes the pump to compensate by varying the pump flow. No restrictor is used in the pressure line and no oil is bypassed.

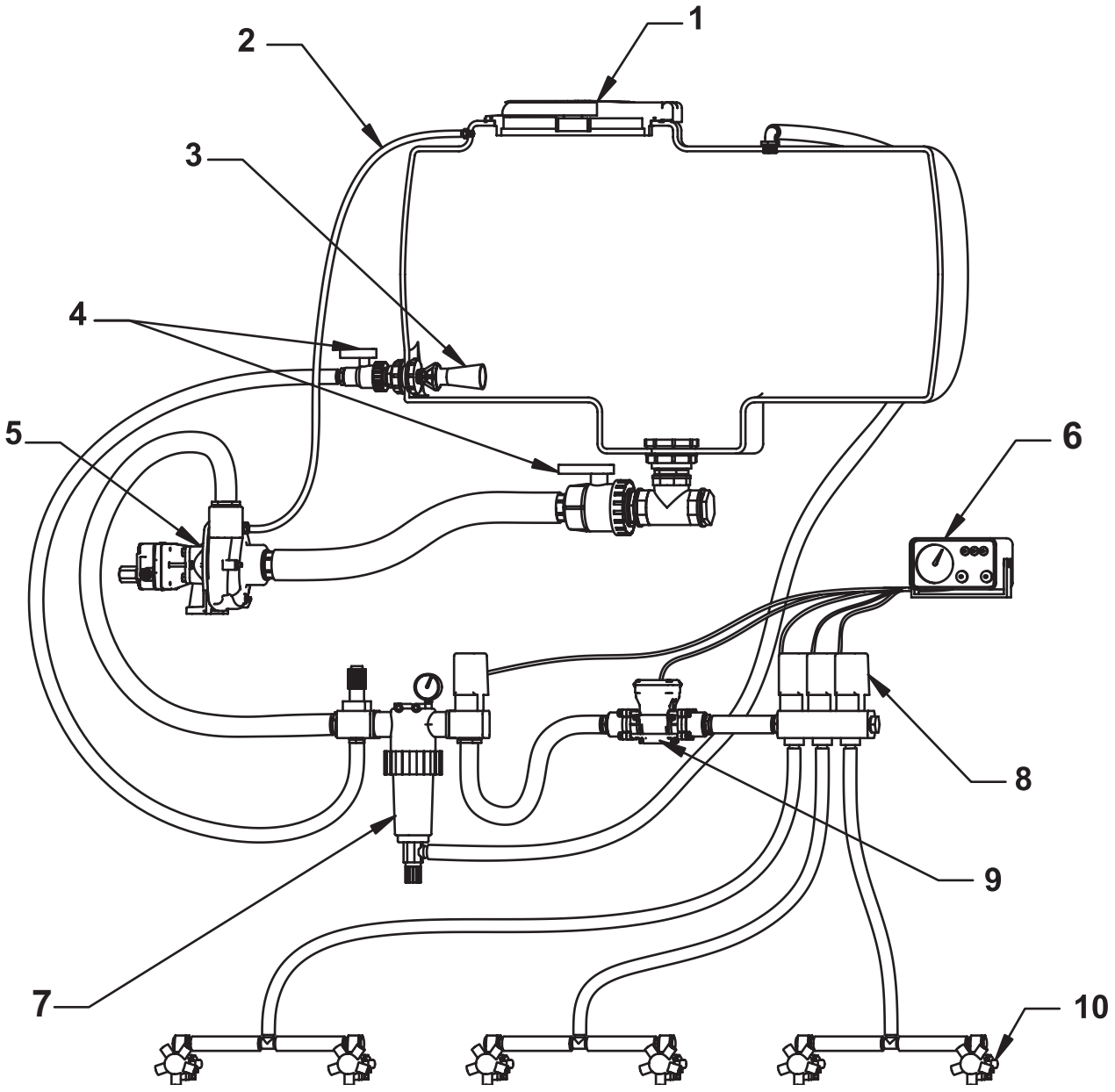


**Centrifugal Plumbing Hook-up**

| REF. NO. | DESCRIPTION |
|---|---|
| 1 | Tank Lid |
| 2 | Vent Line #3430-0456 |
| 3 | Jet Agitator |
| 4 | Shut-off Ball Valves |
| 5 | Centrifugal Pump |
| 6 | Spray Control Console |
| 7 | Centrifugal Pump Control |
| 8 | Manifold Boom Valve |
| 9 | Electromagnetic Flowmeter |
| 10 | Compact Jet Turret Nozzle Body |

### All Models — Open Center Systems

Models include Tank Port Adapter with built-in Check Valve Assembly and Pressure Port Adapter.

### HM2C and HM4C Models Only — Closed Center and Small Open Center Systems.

Models include Tank Port Adapter with built-in Check Valve Assembly and Pressure Port Adapter with three different size metering orifices for HM4C models. The orifices are not required for use with closed center systems with flow control, such as John Deere closed center systems. Also, do not use for small open center systems with a maximum flow of 8 gpm [30.28 lpm] for HM2C model; 10 gpm [37.85 lpm] for HM4C model. If necessary, the pressure port adapter may be used without a metering orifice installed in any closed center system. For best results, the pressure differential across the motor should be less than 2500 psi (170 bar).

### Preliminary to Mounting

Consult the owners manual to determine the type and capacity of the hydraulic system. Make sure the hydraulic system is recommended to operate with a continuous load. Refer to the Pump Selection Guide to confirm you have the proper pump for your hydraulic system.

Check to see that the pump impeller can be turned by hand. (Turn the shaft clockwise using a deep socket wrench on the impeller nut.) If it cannot be turned, open the pump casing to look for obstructions. Clean out any corrosion build up where the casing fits over the eye of the impeller.

### Pump Inlet Line

To achieve full capacity from the pump, the inlet line should be at least the same size as the inlet port on the pump. Reducing this line size will restrict the capabilities of the pump. The line must also be free of air leaks. Check all fittings and connections in the suction line for tightness. The introduction of air may affect the priming and pumping capabilities of the pump. Use good quality suction hose that will not be collapsed by suction.

For non self-priming models, the centrifugal pump should be mounted below the liquid level and as near to the liquid source as possible to allow for the shortest suction line practical. To achieve optimal performance, the suction line should slope down into the pump. Avoid rises and humps that could trap air in the line to the pump. The suction line and pump should be filled with liquid prior to starting the pump, and all discharge lines should be open.

### Pump Outlet Line

The recommended orientation for the outlet port is pointing straight up. This allows liquid to stay in the pump while it is priming. The outlet line should be the same size as the pressure port on the pump to give the optimal flow. The line should have as few restrictions and elbows as possible to optimize the pump performance and reduce pressure drop from the pump to the spray tips.

### Priming the Pump

**NOTE**

**The pump must not be run dry.**

Before starting the pump, the inlet line and pump must be filled with liquid and all discharge lines must be open. On self-priming models, only the pump chamber needs to be filled with liquid. The pump must not be run unless it is completely filled with liquid because there is a danger of damaging the mechanical seal, which depends on the liquid for its lubrication.

Non-self-priming models should be mounted below the level of the liquid. The suction line should slope down to the pump and be free of dips and bends. If this cannot be done, a foot valve should be installed in the end of the inlet line so that the line can be completely filled with liquid before starting the pump.

**For best priming results, the top vent plug should be removed from the pump casing. A vent line (1/4" [6.35 mm] tubing is sufficient) should be installed running back to the top of the tank.** This line prevents air lock and allows the pump to prime itself by bleeding off trapped air. The small stream of liquid that returns to the tank during operation is negligible. The discharge from this line should be positioned in the tank above the high liquid level. Self-priming models can be primed by removing the top vent plug and filling the priming chamber. The priming chamber will fill to the level of the inlet port. After use, the priming chamber should be flushed and drained to avoid chemical corrosion and damage from freezing. Drain by removing the lower drain plug.

### Controlling the Pump Flow

The best way to control the flow is by incorporating two control valves in a pipe tee immediately after the strainer in the discharge line. This permits controlling agitation flow independently of nozzle flow.

In any centrifugal pump, it is the large volume of liquid which puts load on the drive. Use only the flow needed to develop the pressure required at the boom and to maintain adequate agitation. Hydraulic motor-driven centrifugal pumps are easily adjusted to the exact flow required, as explained in the Operating Instructions of this manual.

### Centrifugal Pump Control

Hypro now offers many different components for spraying systems. The Hypro centrifugal pump control incorporates the electric flow control valve, a self-cleaning line strainer, a visual pressure gauge and a manual agitation control valve.

### Flow Control Valve

A high-flow electric proportional valve allows for maximum flow control to the boom valves. It provides smooth, rapid control that can be controlled from either an electronic rate controller or switch box.

### Strainers

The recommended placement of the strainer for a centrifugal pump is in the pump outlet line. This will eliminate any possible restriction that the strainer could create if it were installed in the inlet line. Ensure that the proper strainer size and screen mesh are used to limit the pressure drop

and achieve the best filtration. Line strainers can also be installed in the tank fill line to filter liquid as it is loaded into the tank as well as in the boom lines to further filter the solution prior to the spray tips. Tank baskets can also be used to filter material added through the tank lid.

**Agitation**

The centrifugal pump control contains a manual agitation control valve that can be adjusted to provide the right amount of flow to the jet agitators in the tank to ensure proper mixing within the tank.

**Flowmeter**

To eliminate the mechanical problems of a turbine flowmeter, we recommend that an electromagnetic flowmeter be used. These flowmeters have no moving parts to wear out and will provide a more consistent and accurate flow reading. They can be input into just about any electronic rate controller or switch box.

**Boom Section Valves**

For rapid response and reliability, we recommend electric plunger valves be used for boom control. The valves should be sized accordingly to minimize the pressure drop and maximize the flow rate. The boom tubing or hose should be sized accordingly to ensure that a pressure drop in the lines does not occur, causing inconsistent pressures at the nozzles.

**Nozzle Bodies**

Nozzle bodies with shut-off check valves are recommended to eliminate dripping from the spray tips when the boom valves are shut down.

**Hooking Up the Hydraulic Motor to the Tractor Hydraulic System**

Hypro Series 9300HMC hydraulic motor-driven pumps can be mounted on either the tractor or sprayer. When hooking up, make sure that no dirt or liquid gets into the hydraulic motor. **Keep all hydraulic connections clean.** Be sure to connect the hydraulic motor into the system correctly by putting the pressure line to the Pressure Port Adapter and return line to the Tank Port Adapter. The adapters on the hydraulic motor are sized to accommodate 1/2” NPT fittings on the pressure port and 3/4” NPT on the tank port. For maximum performance, the hydraulic lines should also be at least 1/2” [12.7 mm] in size for the pressure line and 3/4” [19.05 mm] for the tank line.

The tank (**OUT**) port adapter with a built-in check valve assembly will guard against reverse operation — allowing you to reverse oil flow to operate other equipment. **This adapter must not be removed.** On HM2C and HM4C model pumps, the pressure (**IN**) port adapter is a two-piece assembly consisting of an open (unrestricted) adapter with three orifices packed loose with the pump. (See the Operations Section.)

When using the HM2C or HM4C unit on any flow- compensated (load sensing) closed center system, or any small open center system with a maximum flow of 8 gpm [30.28 lpm] for HM2C or 10 gpm [37.85 lpm] for HM4C, the metering orifice should be removed from the pressure port adapter. When using these units on flow-compensated systems, connect to the motor priority circuit if your tractor has one.

Standard spool valves, which are found on all tractor hydraulic systems, may cause potentially damaging high peak pressures in the hydraulic system when closed because of abrupt shut-off of oil flow in both the supply and return lines. When shutting off the pump, move the selector to the **FLOAT** position to allow the centrifugal pump to come to a stop gradually.

**For further information regarding Hypro products, contact your local dealer or Hypro directly at www.hypropumps.com or by calling 1-800-424-9776.**

## Operation

**Open Center Systems— All Models**
**Adjusting Centrifugal Pump Output**

**NOTE**

HM1C, HM3C & HM5C motors have bypass screw fully closed from the factory. HM2C & HM4C motors have bypass screw set at 1-1/2 turns from fully closed from the factory.

1. Open the bypass adjustment screw 2-1/2 turns from fully closed. Turn the bypass screw in to achieve the flow for the desired gpm and psi.
2. Start the tractor. Leave the directional valve in the neutral position and allow hydraulic oil to circulate for approximately 10 to 15 minutes or until adequately warmed.
3. Prime the centrifugal pump with all valves open (See the Installation Instructions and System Configuration Diagram).
4. Close the agitation line valve and keep the control valve and the boom shut-off valve open. Note the spray pressure.
5. Open the agitation line valve until you have desired circulation in the tank. Recheck the spray pressure. If it is too low, close down the agitation line valve until the desired spray pressure is reached. If the spray pressure is too high, throttle the centrifugal pump by closing down the control valve.

### Closed Center (Pressure-Compensated) — HM2C and HM4C Models Only

On a pressure-compensated system, the amount of oil that is allowed to flow through the hydraulic motor is regulated by a metering orifice in the pressure port adapter. Three different sizes of orifices are supplied with the HM2C and HM4C model pumps to allow flexibility in the flow required for individual sprayer needs.

The smaller the orifice, the less hydraulic oil goes through the motor, so the pump will run slower and the flow of liquid pumped and the spray pressure will also be less. As the hydraulic oil flow is increased (by installing a larger orifice), the amount of liquid being pumped and the spray pressure is also increased.

### Installing and Removing Metering Orifice

1. Shut off the hydraulic system.
2. Disconnect the line to the pressure port of the hydraulic motor.
3. Remove the adapter from the motor using a 1-1/16" wrench. Make sure the o-ring is on the metering orifice before installing into port adapter.
4. The orifice is removed or installed in the port adapter by tapping either in or out of the adapter.
   A. To remove — tap the orifice out from the small end of the adapter.
   B. To install — tap the orifice in from the large end of the adapter. The orifice is seated when a snap sound is heard.

### Adjusting Centrifugal Pump Output

1. Open the bypass adjusting screw in the hydraulic motor three (**3**) turns.
2. Start the tractor and allow the hydraulic oil to circulate for approximately 10 to 15 minutes or until adequately warmed.
3. Close and lock down the bypass adjusting screw in the hydraulic motor.
4. Prime the centrifugal pump with all valves open (See Installation Instructions and System Configuration Diagram).
5. Close the agitation line valve and the control valve; open the boom shut-off valve.
6. With the pump running, open the control valve until the pressure gauge indicates the desired spraying pressure.
7. Open the agitation line valve until sufficient agitation is observed. Then, if spray pressure drops, readjust the control valve to restore to the desired pressure.
8. If a sufficient boom pressure cannot be attained, install the #2 size orifice and repeat Steps **5** through **7**.
9. If a sufficient boom pressure still cannot be attained with the #2 size orifice, install the #3 size orifice and repeat Steps **5** through **7**.
10. If a sufficient boom pressure still cannot be attained with the #3 size orifice, remove the orifice and repeat Steps **5** through **7**.

### Closed Center (Load Sensing) — All Models

Many tractors are being introduced with load sensing systems (also referred to as flow and pressure- compensated systems) which simplify system setup and eliminate many of the problems associated with using the wrong size pump motors on a given hydraulic system. Usually, any of Hypro's 9300HMC models may be used on this type of system, provided the hydraulic system produces sufficient oil flow for the hydraulic motor being used (Refer to the Pump Selection Guide).

This system maintains a constant flow of hydraulic oil for a given pressure drop. The flow is adjustable with a flow control valve installed in the hydraulic system (such as the Tortoise/ Hare control on John Deere tractors). Because this system has adjustable flow, there is no need to bypass hydraulic oil as in an open center system, or to restrict the flow with orifices as in a closed center pressure- compensated system.

### Adjusting Centrifugal Pump Output

1. Make sure the orifice from the pressure port adapter of the hydraulic motor has been removed (HM2C and HM4C models only).
2. Close and lock down the bypass adjusting screw in the hydraulic motor.
3. Set the tractor hydraulic flow control valve for minimum hydraulic oil flow to the remote outlet (Tortoise position).
4. Start the tractor and allow the hydraulic oil to circulate for approximately 10 to 15 minutes or until adequately warmed.
5. Prime the centrifugal pump with all valves open (See the Installation Instructions and System Configuration Diagram).
6. Close the agitation line valve and open the control valve and the boom shut-off valve.
7. Slowly adjust the tractor hydraulic flow control valve until the desired boom pressure is attained.
8. Open the agitation line valve until sufficient agitation is observed. If spray pressure drops, readjust the tractor hydraulic flow control valve to restore it to the desired pressure.

### Flush Pump After Use

One of the most common causes for faulty pump performance is gumming or corrosion inside the pump. Flush the pump and entire system with a solution that will chemically neutralize the liquid pumped. Mix this solution according to the manufacturer's directions. This will dissolve most residue remaining in the pump, leaving the inside of the pump clean for the next use.

### To Prevent Corrosion

After cleaning the pump as directed above, flush it with a permanent-type automobile antifreeze (Prestone®, Zerex®, etc.) containing a rust inhibitor. Use a 50% solution, half antifreeze and half water. A protective coating will remain on the inner pump surfaces. Save the excess antifreeze for the next application. Plug the ports to keep out air during storage. For short periods of idleness, noncorrosive liquids may be left in the pump, but air must be kept out. Plug the ports or the seal port connections.

# Repair Instructions

**Hypro Repair Tools:**
Tool Box No. 3010-0168 • 1/4" Allen Wrench No. 3020-0008
Support Bars (2) No. 3010-0064 • Port Brush No. 3010-0066
1/16" Allen Wrench No. 3020-0009 • Brush Holder No. 3010-0067 • Large Retaining Ring Pliers No. 3010-0084 • Small Retaining Ring Pliers No. 3010-0167

**Shop Tools Needed:**
Bench Vice • Arbor Press • Air or Hand Drill • Small Knife
Metal Pipe - 1" dia. x 4" high (Bearing Seating Tool)
PVC Pipe - 3/4" dia. x 4" - 6" high (Seal Seating Tool)
12" Crescent Wrench • Two Flat Screwdrivers (approx. 10" long)
1/2'', 9/16", 5/8" and 7/8" sockets • Hammer or Rubber Mallet
Small Screwdriver (recommended) • Large File (optional)
1/2" and 9/16" Box End Wrench • Lubricating Spray (WD-40 or LPS)
Small amount Hydraulic Oil • Cleaning Solvent Tank (recommended)

**NOTE:**

**Visit our website at www.hypropumps.com for video repair procedures, under the Tools section.**

**Pump Housing Disassembly**

**NOTE**

**Instructions in italics describe procedures for the Series 9300P Polypropylene Centrifugal Pumps, when different than the cast iron pumps.**

1. Using a 9/16" box end wrench, remove the four Hex Head Bolts holding the Pump Casing to the Mounting Flange. (If necessary, tap Pump Casing Outlet Port with rubber mallet or hammer to separate.) [*Using a 1/2" wrench, remove the six bolts from the front. For the two bottom bolts securing the base, you will need to hold the two nuts with another 1/2" wrench. Also remove the 5/16" screw from the rear, near the outlet port.*]
2. To remove the Impeller Nut, insert a large screwdriver or file (at least 10" [254 mm] long) into Impeller Vanes to prevent Impeller from turning when loosening nut. Use a 5/8" socket wrench to remove the Impeller Nut by turning it counterclockwise (See Figure 6). [*Use 7/8" deep socket wrench to remove Plastic Seal Nut, then 9/16" deep socket to remove Metal Jam Nut and Washer.*]

**Figure 6**

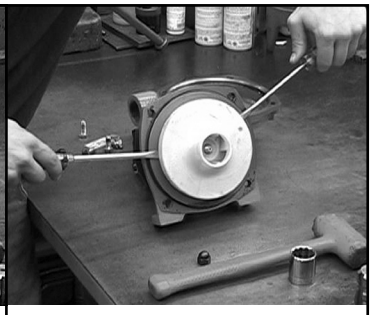

**Figure 7**

3. Once nut [*and washer*] is removed, place a screwdriver on each side behind the Impeller and pry away from the Mounting Flange (See Figure 7). Remove Woodruff Key from the Shaft. Remove O-ring from the Mounting Flange.

**Pump Seal Removal**

1. Lightly lubricate the Shaft for easier removal of the Seal. Using two screwdrivers positioned opposite each other, pry the rotary portion of the Seal from the Shaft (See Figure 8).

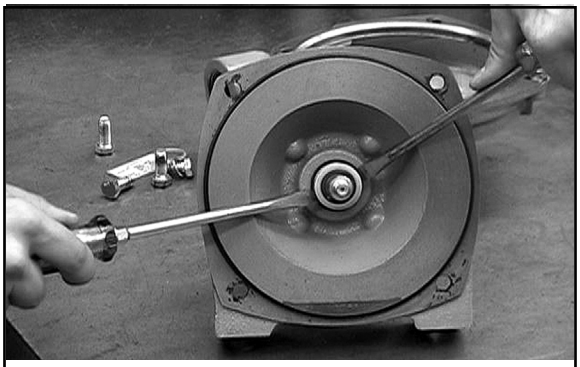

**Figure 8**

**NOTE**

**In the case of a severe pump seal leak, inspect the Shaft/Bearing Assembly in the hydraulic motor for possible contamination.**

2. Using a 1/2'' box end wrench, remove the four bolts holding the Motor to the Mounting Flange. Remove Motor. [*Remove the Plastic Back Cover flange. Knock the Seal out from back with a hammer and screwdriver. Use a 1/2'' socket wrench and 1/2'' box end wrench to remove the Mounting Flange from the Hydraulic Motor.*]

3. Using a screwdriver and hammer, tap out the stationary portion of the Mechanical Seal from the motor side of the Mounting Flange. (If the motor is not removed, the seal can be pried out with a small screwdriver.)

**NOTE**

**The seal will be damaged by removal in this manner. A new seal must be used when pump is reassembled.**

**Clean-Up Of Pump Housing**

1. Using a circular bottle-type wire brush with air or hand drill, clean the Outlet Port, Inlet Port and the sealing areas of the o-ring on the Pump Casing and Mounting Flange. Using the port brush, clean the seal cavity in the Mounting Flange. [*The last step should not be performed on the 9300P*.]
2. After wire brush cleaning, it is recommended that the Pump Casing and Mounting Flange be further cleaned in a solvent tank to remove rust and corrosion particles.

**Seal Replacement/Pump Housing Reassembly**

**NOTE**

**If the hydraulic motor requires repair, proceed to Disassembly and Repair of the Hydraulic Motor in the next column.**

1. Lubricate the seal cavity in the Mounting Flange with WD-40®, LPS or equivalent. Do not lubricate the shaft.
2. Install the stationary portion of the Mechanical Seal by sliding over the Shaft with the ceramic side out.

**NOTE**

**Make sure both the seal cavity and seal are clean and lubricated.**

3. To seat the seal in the seal cavity, use a piece of 3/4" PVC pipe 4" to 6" [*101.6 to 152.4 mm*] in length. Lubricate sealing surface on seal after it is seated. Do not lubricate the shaft.
4. To install the rotary portion of the mechanical seal, place it over the shaft with the carbon side facing in, and press against the stationary portion (See Figure 9).
5. Install rubber gasket 1700-0100 over shaft against rotary portion of seal.

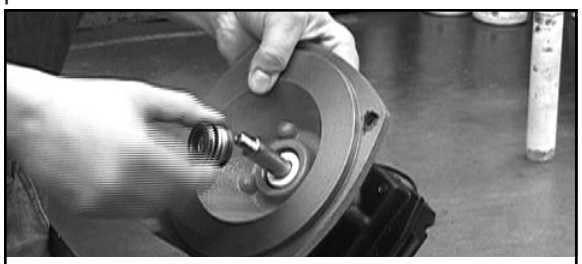

**Figure 9**

**NOTE**

**On Models 9305C-HM3C-SP, 9505C-HM3C-BS and 9305C-HM3C, install the washer on the shaft prior to installing the impeller nut.**

**⚠ CAUTION**

**The threads of the Plastic Seal Nut are fine and can be easily cross threaded. To prevent cross threading, turn the Plastic Seal Nut counterclockwise until area of thread engagement is detected; then turn the Plastic Seal Nut clockwise until it is secure. Do not over tighten the Plastic Seal Nut.**

6. Insert a Woodruff Key into the Shaft key slot; then place the Impeller on the Shaft and align it with the Key and press against the Mechanical Seal Assembly. Apply a blue thread locking compound to the Impeller Nut, and using a 5/8'' socket wrench and using a screwdriver to hold the Impeller, install the Impeller Nut. [*On polypropylene models, insert the Woodruff Key into the Shaft key slot. Place the Impeller on the Shaft and align it with the Key; then press against the Mechanical Seal Assembly. Place the Metal Seal Washer on the Shaft. Apply a drop of blue thread locking compound on the Impeller Nut and secure the Impeller to the Shaft as described previously*.]
7. Install the o-ring on the mounting flange. Replace the o-ring if worn or damaged.
8. Place the pump casing on the mounting flange, insert and tighten the bolts.

**Disassembly and Repair of the Hydraulic Motor**

**NOTE**

**The work area and motor should be as clean as possible to prevent contamination of parts.**

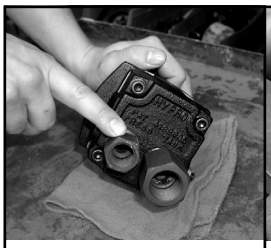

**Figure 10**

**Figure 10a**

1. Remove the Mounting Flange from the motor body and place Hydraulic Motor in vise.
2. Remove Tank Port Adapter and Pressure Port Adapter with large crescent wrench or 1-1/16" and 1-3/8" box end wrench (See Figure 10).
3. Using a 9/16" box end wrench, loosen the nut on the By-pass Adjusting Screw (See Figure 10a).
4. Using a small screwdriver, remove the Bypass Adjusting Screw from the Motor. (This will remove the Screw, Nut, Washer and Thread-Seal Gasket.)
5. Using a 1/4" Allen wrench, remove the Socket Head Cap Screws from the Motor End Plate (See Figure 10).
6. If Motor End Plate will not lift off easily, use a small screw-driver to carefully pry apart the boss portion of the End Plate and Gerotor Housing until free (See Figure 11). If Gerotor Housing will not lift off easily, carefully pry apart

the boss area between the Gerotor Housing and the Motor Body. (It may be necessary to alternate sides when prying apart Motor sections.)

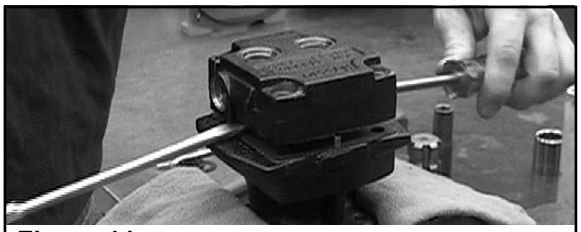

**Figure 11**

7. Remove both parts of the Gerotor.
8. On HM3C models, remove the Woodruff Key from the Shaft. On HM1C, HM2C and HM4C models, remove the Roll Pin from the Shaft.
9. Remove the o-ring from the Motor End Plate and Body with a flat instrument such as a knife blade.
10. Inspect Motor End Plate, Body and Gerotor Housing for wear and/or gouging. If gouging has occurred in both the Motor End Plate and Body, the motor is not repairable. If gouging has occurred in the Motor End Plate, Body or Gerotor Housing, the part that is worn must be replaced. If Gerotor Housing is damaged, Gerotor parts must also be replaced.

**To Remove the Shaft Assembly from the Motor Body**

1. Remove the Slinger Ring from the Motor Shaft.

**⚠ WARNING**

**Special attention should be exercised when working with retaining rings. Always wear safety goggles when working with spring or tension loaded fasteners or devices.**

2. Using the large retaining ring pliers, remove the Retaining Ring next to the Ball Bearing in the Motor Body.

**NOTE**

**If bearing is binding against the retaining ring so that it cannot easily be removed, place the motor body (threaded portion of the shaft up) on arbor press. Using a piece of un-threaded metal pipe (1" dia. x 4" high [254. mm x 101.6 mm high]), slide over the shaft and gently press down with the arbor press just enough to relieve the pressure on the retaining ring.**

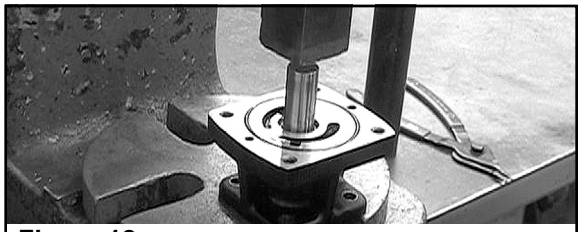

**Figure 12**

3. Place body in position on arbor press. Threaded portion of the Shaft should be inside the fixture. Press out shaft assembly with arbor press (See Figure 12).

**Hydraulic Motor Shaft Disassembly and Repair**

1. Remove Large Retaining Ring from Shaft with a screwdriver. Remove Thrust Bearing Assembly from Shaft (includes the Thrust Bearing and two Thrust Bearing Races) and the Seal Spacer.
2. Remove the Small Retaining Ring next to the Shaft Ball Bearing.
3. To remove the Bearing from the shaft, place the shaft (threaded end up) in the arbor press fixture. Place the two support bars provided in the repair kit opposite each other and between the seal on the shaft and the arbor press fixture. Using an arbor press, press the shaft through the Bearing, Seal Spacer and Seal (See Figure 13).
4. Inspect the sealing area of the shaft for wear. Inspect other Shaft Assembly Components for wear and replace if necessary.

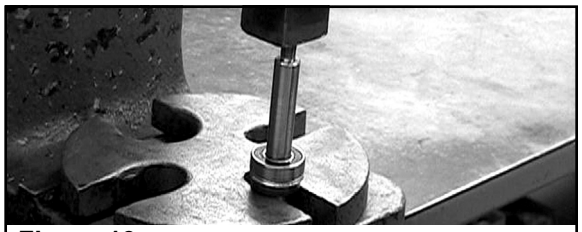

**Figure 13**

5. While motor is completely disassembled, clean all parts in a solvent bath.

**Build Shaft Sub-Assembly**

1. To assemble the seal cartridge, remove the old seal from the cartridge by pressing it out. The cartridge is reused by assembling the new seal into cartridge, ensuring the new seal is pressed in with the lip seal on the opposite side as shown in Fig.A.

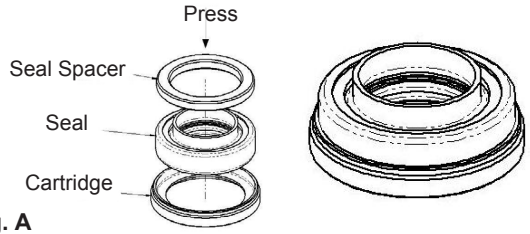


**Fig. A**

**Important:** To prevent damage to the seal lip extending out, use seal spacer as shown to guard lip during assembly.

2. Install the large retaining ring onto large diameter end of shaft.
3. From the small, threaded end of the shaft, install the following parts in this order: thrust bearing race, thrust bearing, 2nd thrust bearing race.

**Note:** The thrust bearing and races should not be reused if they are showing any signs of wear.

4. Install new type seal spacer (looks like a thick washer, approx .130 inch thick).
5. Before installing the new seal, its lip must be expanded to fit on the shaft. With the seal lip facing out, slide the seal over the threaded end of the shaft and gently push the seal onto the raised area of the shaft. Do not push the seal past the large retaining ring groove on the shaft.

6. Once the seal has been expanded, remove the seal from the shaft.

7. Install seal cartridge assembly: With seal lip facing the large end of the shaft, slide the seal cartridge assembly over the threaded end of the shaft and gently push into the raised area of the shaft. Align the seal lip to enter the center diameter of the seal spacer and push until seal body touches seal spacer.

**Important:** If the seal lip is longer than the seal spacer's width, please stop the assembly and review parts being used.

8. Assemble two o-rings on the outside body of the new seal cartridge assembly as shown in Fig B. Install o-rings one at a time and do not roll over each other.

**Fig. B**

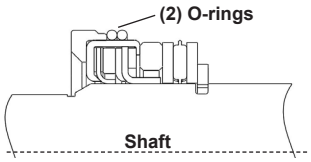


9. Finished shaft sub-assembly should look like this:

10. Do not press, but place the shaft sub-assembly into the motor body with threaded end of shaft up. Lubricate the two o-rings with hydraulic or mineral oil before assembling.

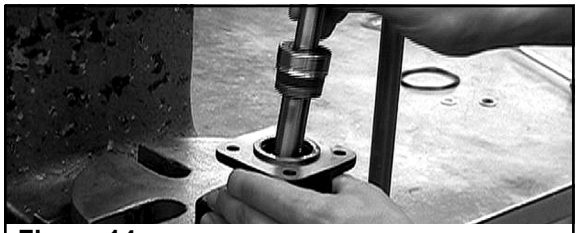

**Figure 14**

### Install Shaft Sub-Assembly Into Motor Body

**Important:** Make sure the surface edge of the arbor press fixture is smooth and clean. An unthreaded piece of pipe (1" x 4" high) is needed to support the outer race of the seal cartridge sub-assembly and outer race of the ball bearing during assembly. Place this pipe over the shaft threaded end for assembly of the following steps.

1. Place the body on a support fixture in the arbor press. Using an unthreaded piece of pipe (1" dia. x 4" high), press the shaft subassembly down into the body until it bottoms out. This is a light press fit and should be done slow and easy.

2. Install the new ball bearing onto the threaded end of the shaft. Press down using the 1" x 4" pipe until the retaining ring can be installed in its groove in the bearing core of the motor body. Install the retaining ring.

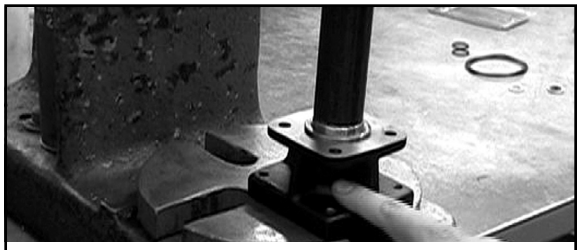

**Figure 15**

3. Turn the motor body assembly over (threaded shaft end down) on the arbor press. Press the shaft down into its "final position" until the small retaining ring can be installed in the shaft next to the ball bearing.

4. Install small retaining ring on shaft.

5. Check shaft rotation at this point. It should rotate smoothly with only slight resistance from the seal lip pressure on the shaft. If you feel any gritty or sticking movement, return assembly to the arbor press and lightly press on the threaded end of the shaft to relieve press fit compression on the thrust bearing. **Note:** Don't over do this press. The objective is to move the small outer retaining ring installed in the previous step back to "touching only" the ball bearing inner race.

**Important:** If gritty or sticky movement persists, it's likely due to re-used parts or the body needle bearing is in need of replacement.

### Reassembly of Remaining Hydraulic Motor Parts

1. Place Motor Body in a vise with large end of shaft facing up.

2. Install the o-ring in the body.

3. Install the Roll Pin on the shaft. Place the Inner Gear of the Gerotor onto the shaft making sure Gerotor slot lines up with the key in the shaft.

**The Roll Pin can slide up behind the inner gear of the gerotor when the gear is installed. Make sure the key is visible in the slot after the gear is in place.**

4. Install the outer portion of the Gerotor, making sure the Gerotor is centered within the o-ring groove on the body.

5. Install the Gerotor Housing, making sure the pins in the Gerotor Housing line up with their respective holes in the body.

6. Lightly lubricate the area between the Inner and Outer Gerotor, the Outer Gerotor, and Gerotor Housing with hydraulic oil or mineral oil.

**Special attention should be exercised when working with retaining rings. Always wear safety goggles when working with spring or tension-loaded fasteners or devices.**

7. Install o-ring on the motor end plate.

8. Place end plate on gerotor housing, making sure holes in end plate line up with pins in the gerotor housing.

9. Install four Socket Head Cap Screws in Motor End Plate, and using a 1/4” Allen wrench, tighten Cap Screws alternately and evenly in a crisscross pattern to approximately 15 foot pounds [ 20 Nm] of torque.

10. Install the Thread Seal Gasket on the Bypass Adjusting Screw. Put the Gasket on from the slotted end and turn until four threads on the screw are showing. Install the Washer and the Nut. Install Bypass Adjusting Screw in the motor end plate.
    A. For closed center hydraulic systems, turn the Bypass Adjusting Screw in until it bottoms out in the End Plate. Tighten nut down with 9/16” box end wrench.
    B. For open center hydraulic systems, turn the Bypass Adjusting Screw in until it bottoms out in the End Plate; then turn back out 1½ full turns. Holding the Bypass Adjusting Screw with a screwdriver, tighten Nut. (Motor will then have to be readjusted to tractor system.)

11. Replace o-ring on both port adapters.

12. Install Pressure Port Adapter and Tank Port Adapter back onto the motor. (For ease of installation, tighten the Pressure Port Adapter first, then the Tank Port Adapter.)

13. Remove Hydraulic Motor from the vise. Turn shaft by hand to check for binding.

14. Install Slinger Ring over Motor Shaft.

15. Install Motor into Pump Mounting Flange. Insert four Hex Head Bolts; then alternately and evenly tighten them. [*For polypropylene models, secure the Hydraulic Motor to the Mounting Flange with four Hex Head Cap Screws and Nuts. The nuts should be visible when the assembly is complete.*]

## Troubleshooting

If the proper Hydraulic Pump Unit has been selected according to Hypro recommendations, and the unit has been correctly plumbed into the hydraulic system, operation should be quite satisfactory. If spraying performance is unsatisfactoryor hydraulic system heat is excessive etc., check the following troubleshooting guide for possible problems and solutions.

### Troubleshooting Guide

| Symptom | Probable Cause(s) | | Corrective Action(s) |
|---|---|---|---|
| Low discharge | Pump not primed. | — | Remove top most vent plug from face of pump and run pump to expel trapped air (see Installation Instructions). |
| | Air leaks in inlet line. | — | Check and reseal inlet fittings. |
| | Blocked or clogged line strainer. | — | Inspect strainer and clear any debris from screen. |
| | Impeller plugged. | — | Inspect and clear obstruction. |
| | Undersize inlet line or collapsed hose. | — | Suction line should be the same diameter as inlet port of pump or larger. |
| | Improperly sized hydraulic motor. | — | Refer to Pump Selection Guide to determine proper size hydraulic motor for your hydraulic system. |
| | Bypass Adjustment Screw not set properly. | — | Adjust bypass screw on side of hydraulic motor in until the desired output is attained. |
| | Eye of impeller rubbing on volute. | — | Remove volute (front cover) and inspect the impeller. If wear detected, sand the impeller eye O.D. with emery cloth. |
| Hydraulic system overheating | Improper hydraulic motor size. | — | Refer to Pump Selection Guide on our website to determine proper size for your hydraulic system. |
| | Bypass Adjustment Screw set to bypass too much oil. | — | Close adjustment screw on side of hydraulic motor to lessen the amount of oil being bypassed. |
| | Improper metering orifice installed in pressure port. | — | Install proper size orifice. Refer to Installation section for proper sizing. |
| | Insufficient hydraulic hose size. | — | Check hydraulic hose size. Hose should be at least 1/2” [12.7 mm] on the pressure port and 3/4” [19.05mm] on the tank port. |

**NOTE: See Hydraulic Test Kit 3430-0650 and our Operation Manual No. L-1503 for further guidance and troubleshooting.**

# Performance Graphs

**GRAPHS FOR HYDRAULICALLY-DRIVEN CENTRIFUGALS**

## 9302

**9302C-HM1C & 9302S-HM1C**

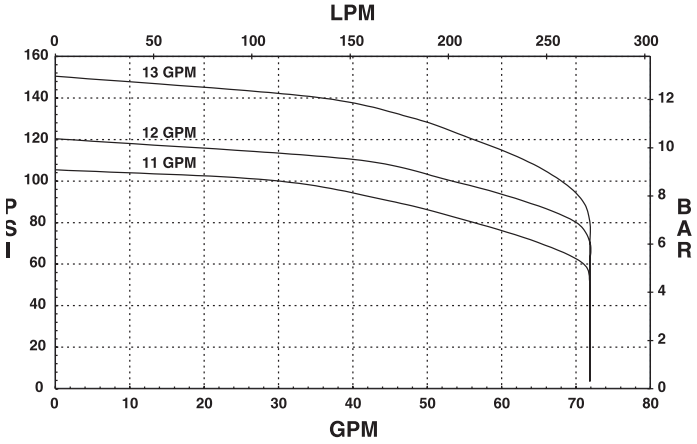


## 9302

**9302CT-GM1 & 9302ST-GM1**

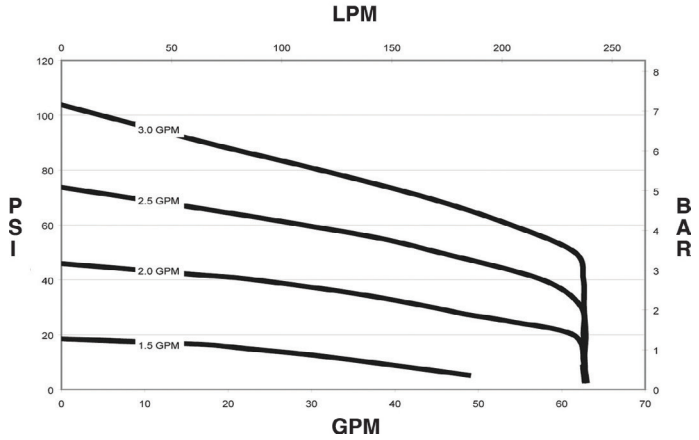


**9302C-HM2C & 9302S-HM2C**

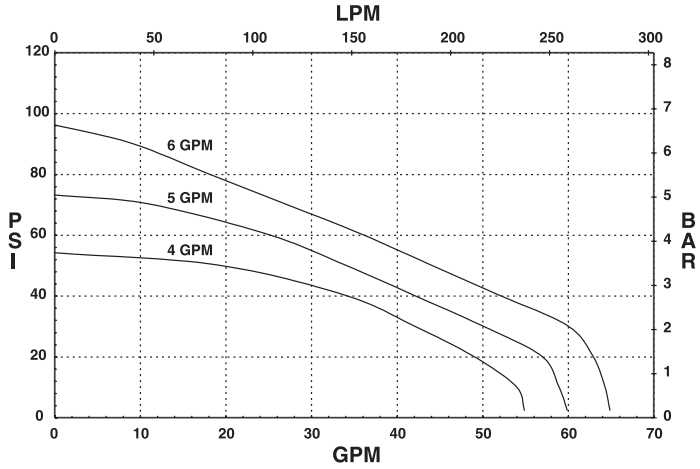


## 9303

**9303C-HM1C & 9303S-HM1C**

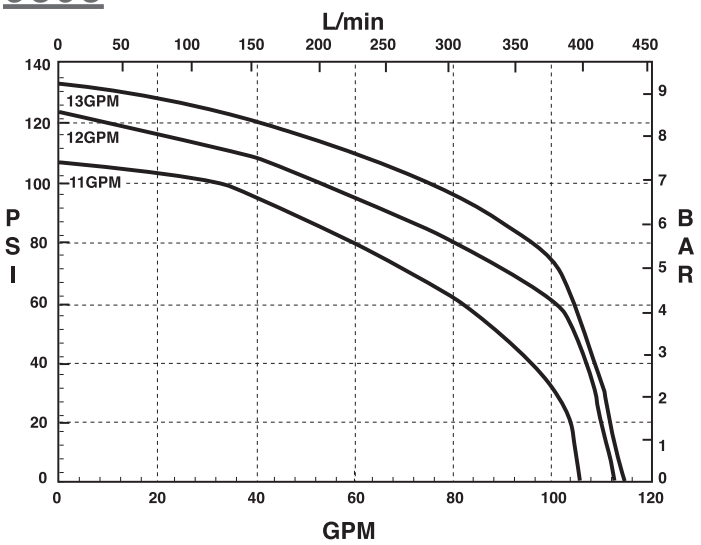


**9302C-HM4C & 9302S-HM4C**

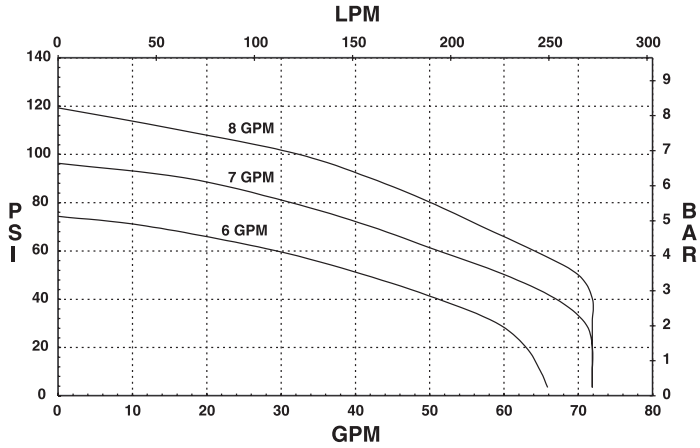


**9303C-HM1C-SP Performance at 11 GPM**

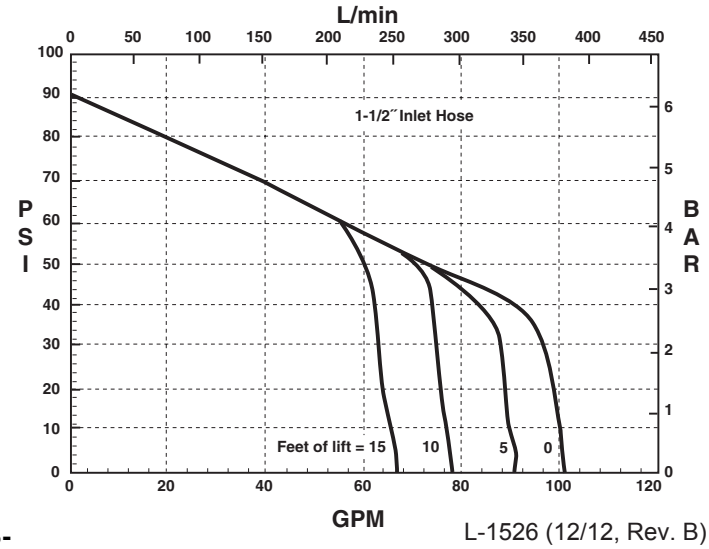

## 9303 9303C-HM1C-SP Performance at 12 GPM

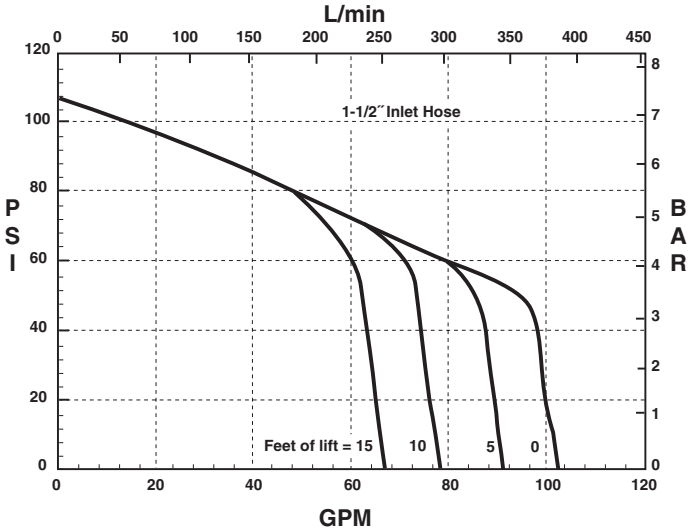


## 9303 9303C-HM2C-SP Performance at 4 GPM

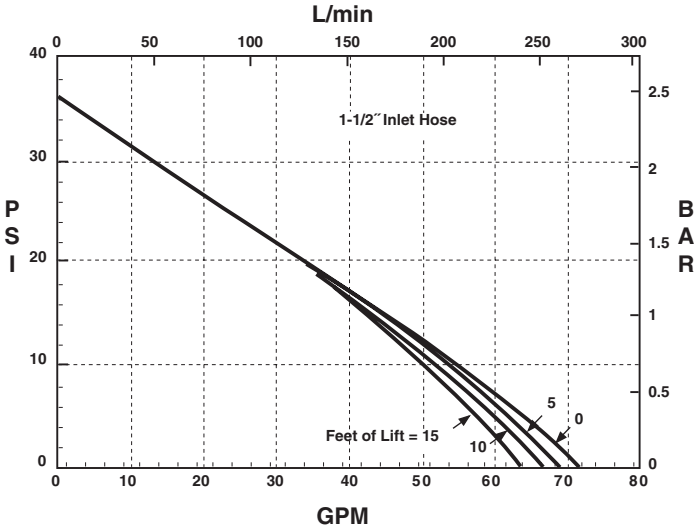


## 9303C-HM1C-SP Performance at 13 GPM

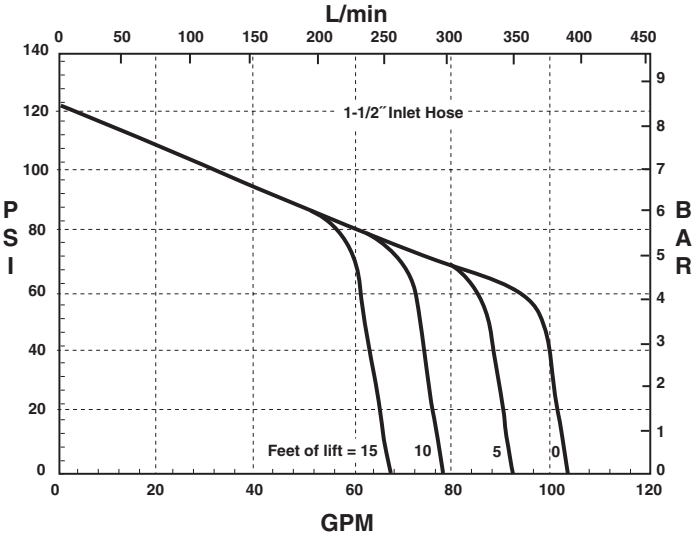


## 9303C-HM2C-SP Performance at 5 GPM

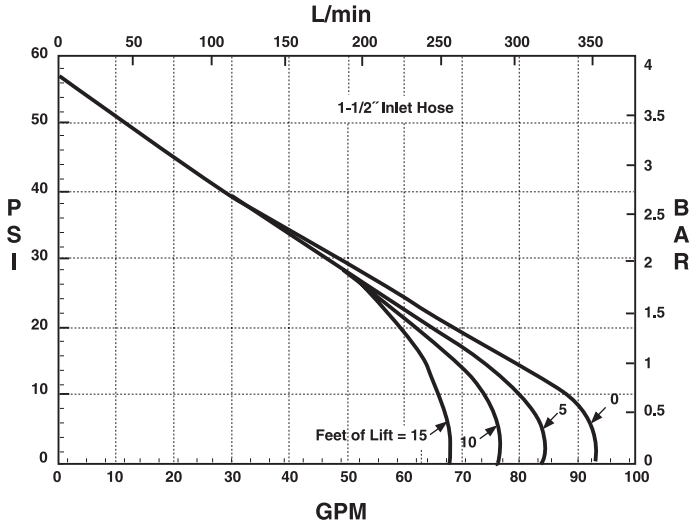


## 9303C-HM2C & 9303S-HM2C

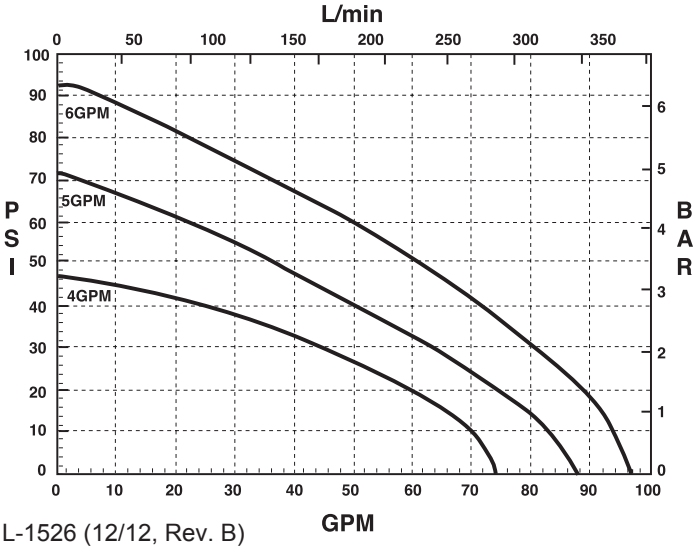


## 9303C-HM2C-SP Performance at 6 GPM

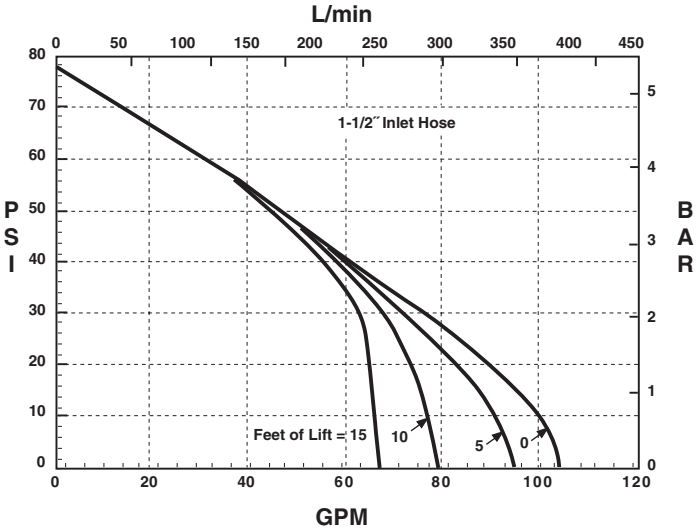

**9303** 9303C-HM3C & 9303S-HM3C

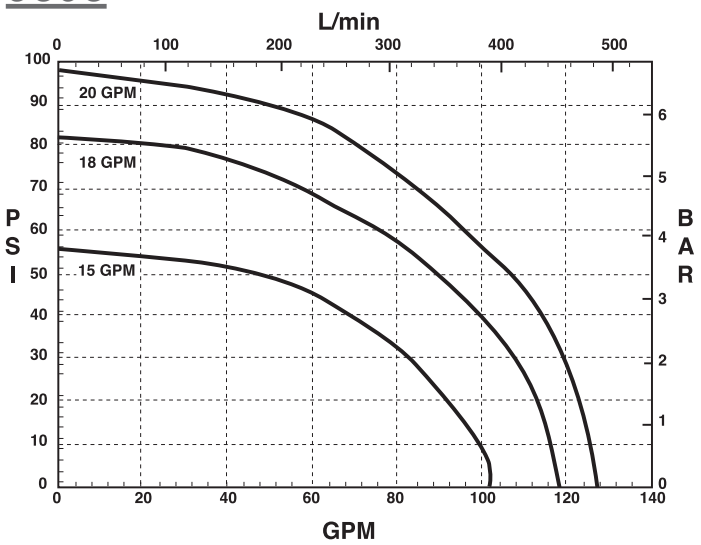


**9303** 9303C-HM3C-SP Performance at 20 GPM

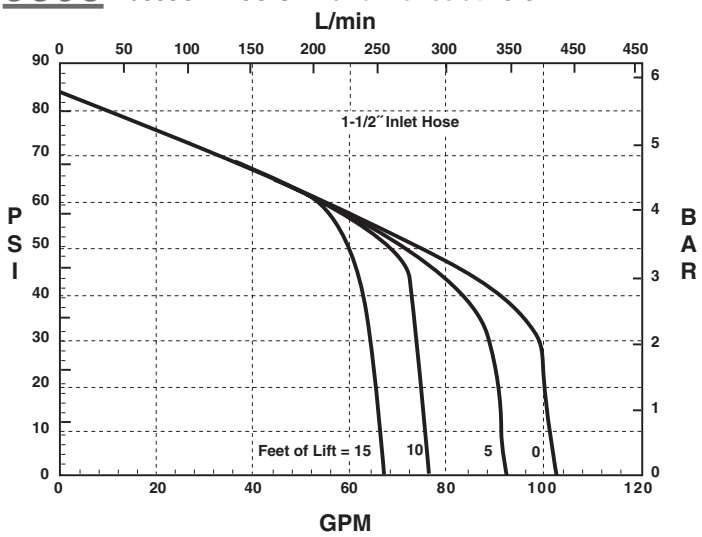


9303C-HM3C-SP Performance at 15 GPM

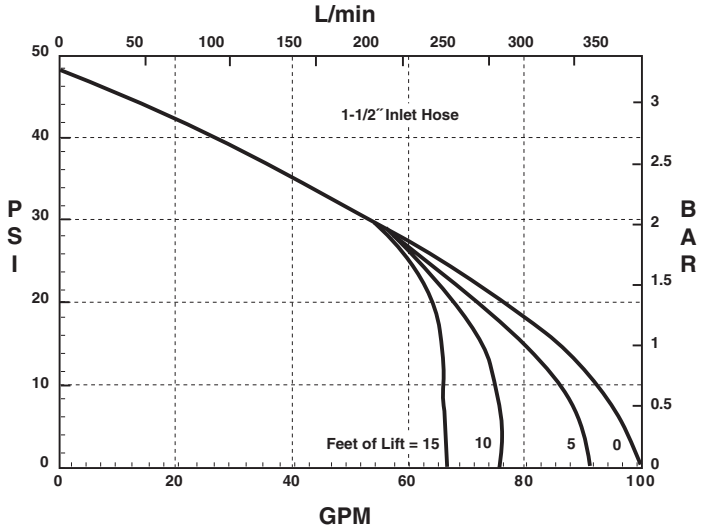


9303C-HM4C & 9303S-HM4C

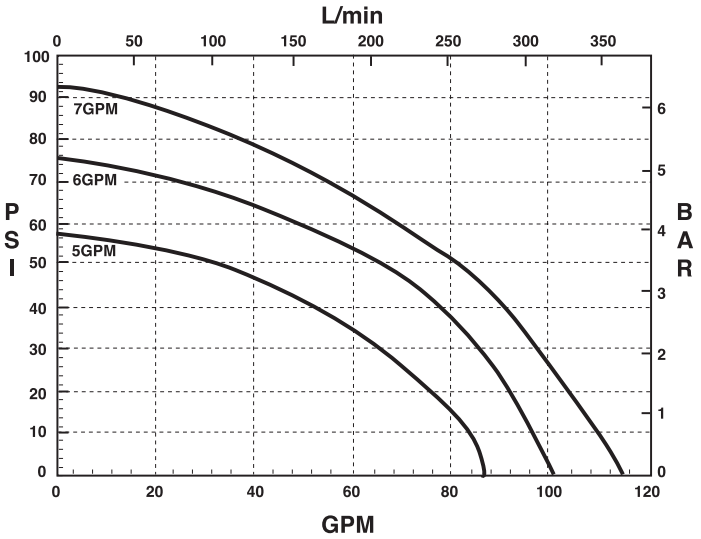


9303C-HM3C-SP Performance at 18 GPM

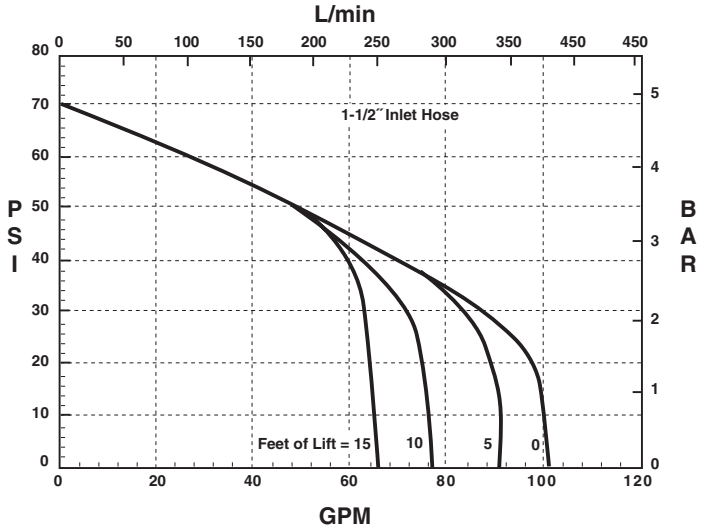


9303C-HM5C & 9303S-HM5C

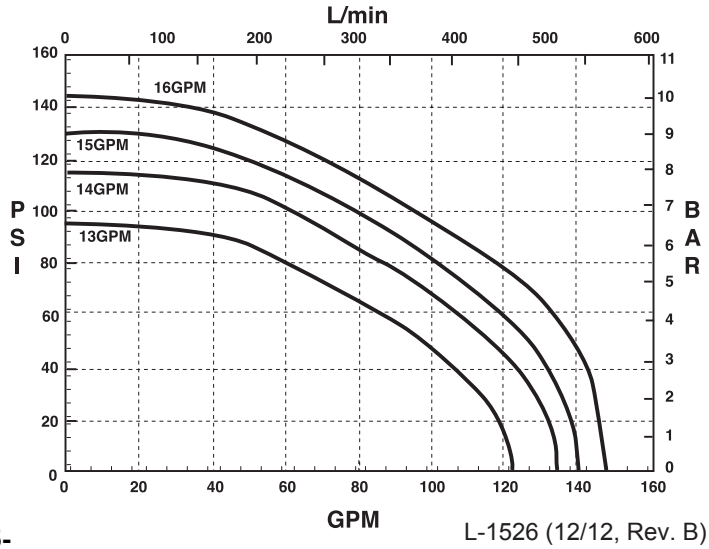

## 9303 9303C-HM5C-SP Performance at 13 GPM

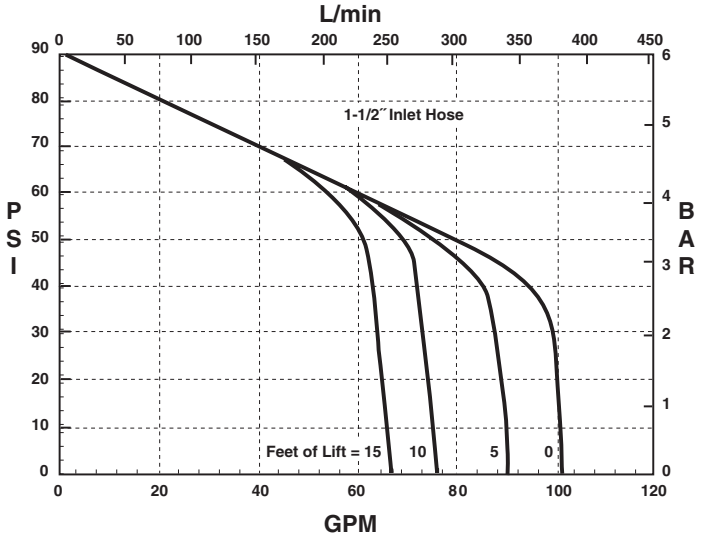


## 9303 9303P-HM1C

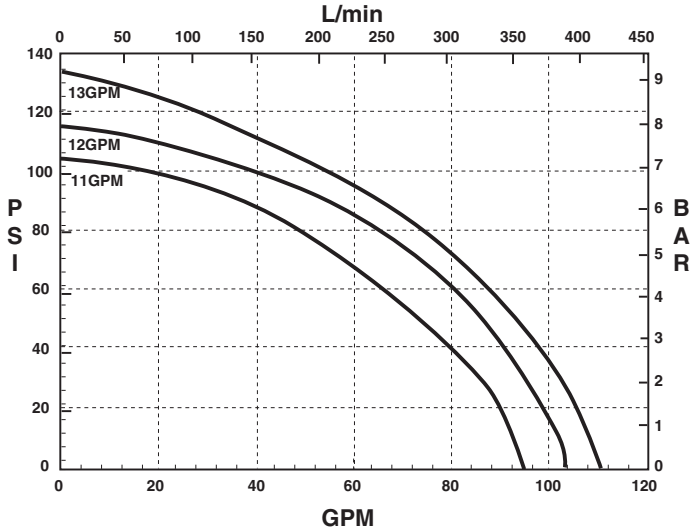


## 9303C-HM5C-SP Performance at 14 GPM

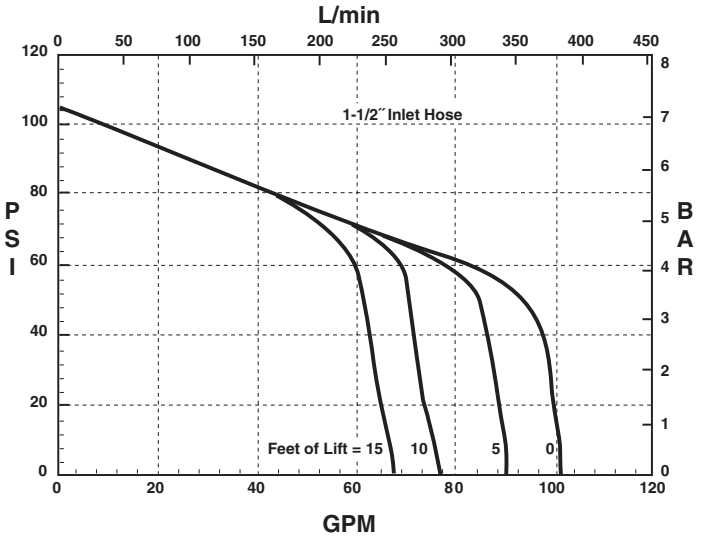


## 9303P-HM2C

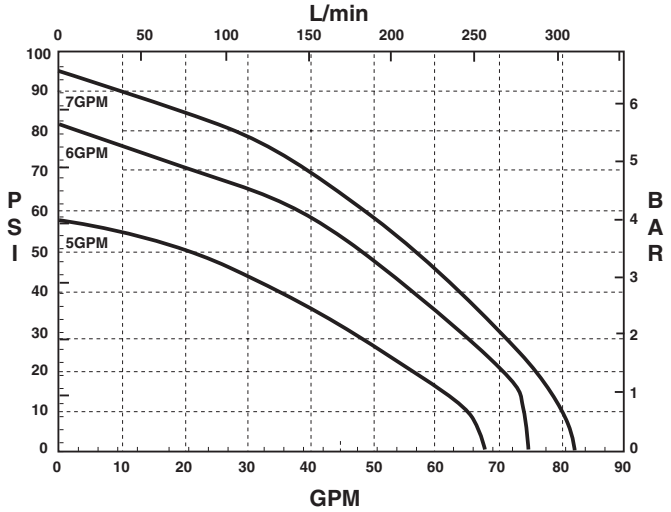


## 9303C-HM5C-SP Performance at 15 GPM

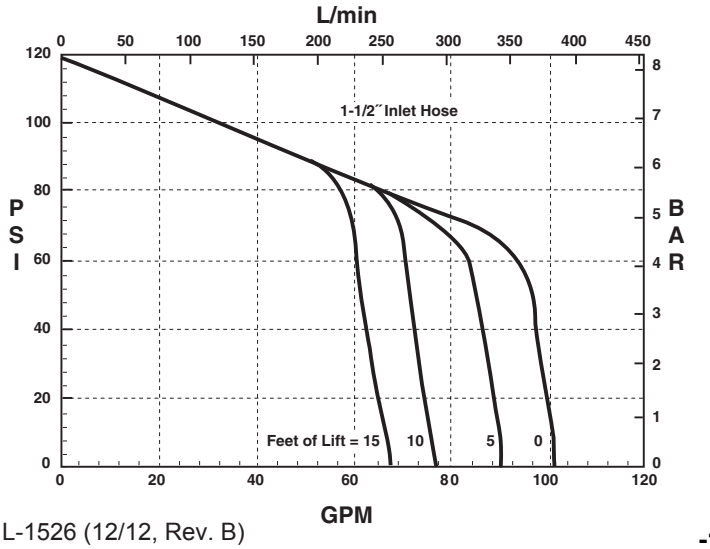


## 9303P-HM3C

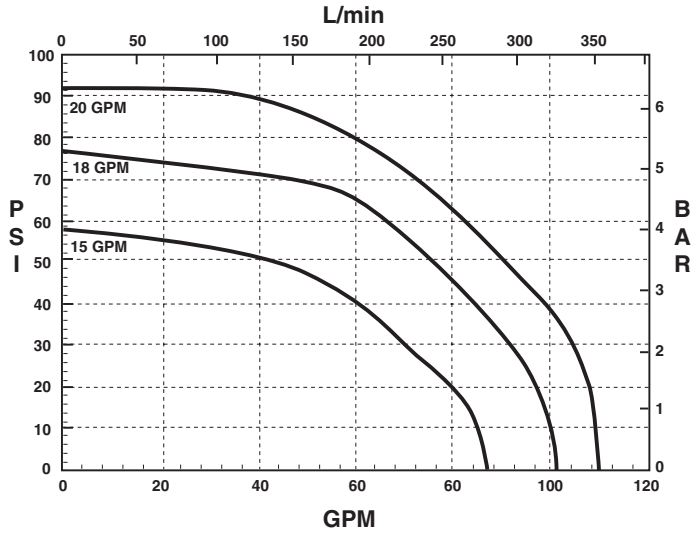

## 9303

### 9303P-HM4C

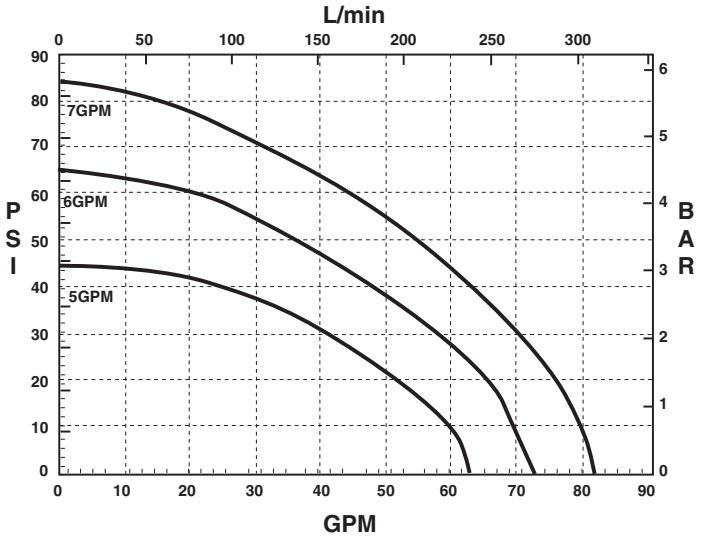


### 9303P-HM5C

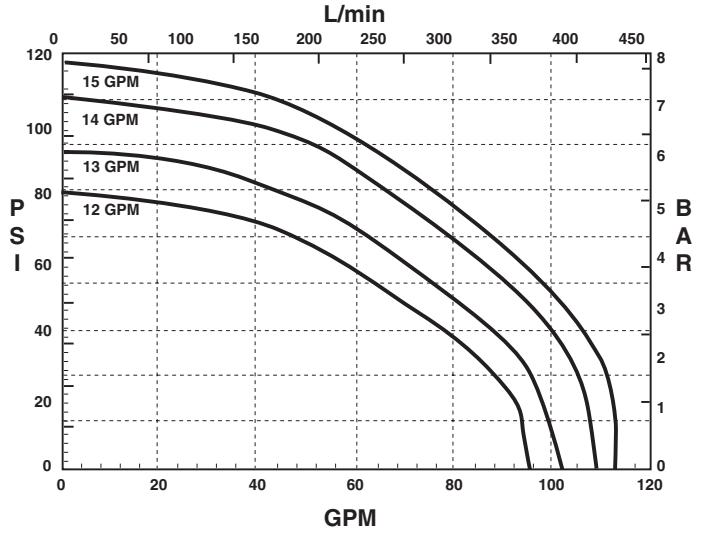


## 9305

### 9305C-HM3C

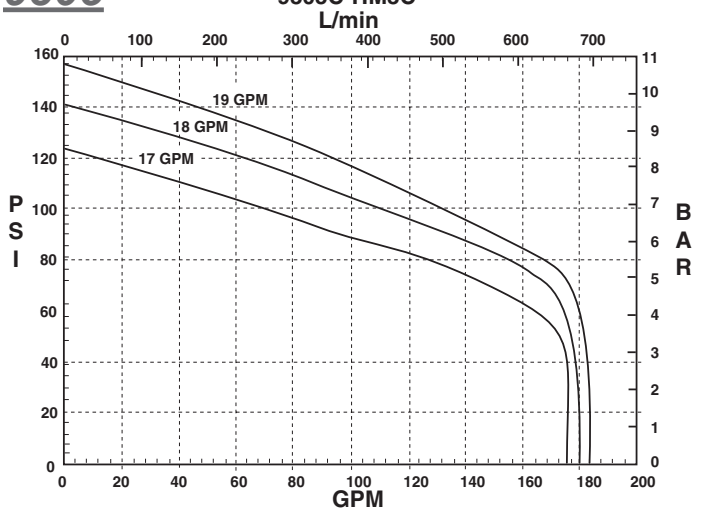


## 9305

### 9305C-HM3C-SP, BSP Performance at 17 GPM

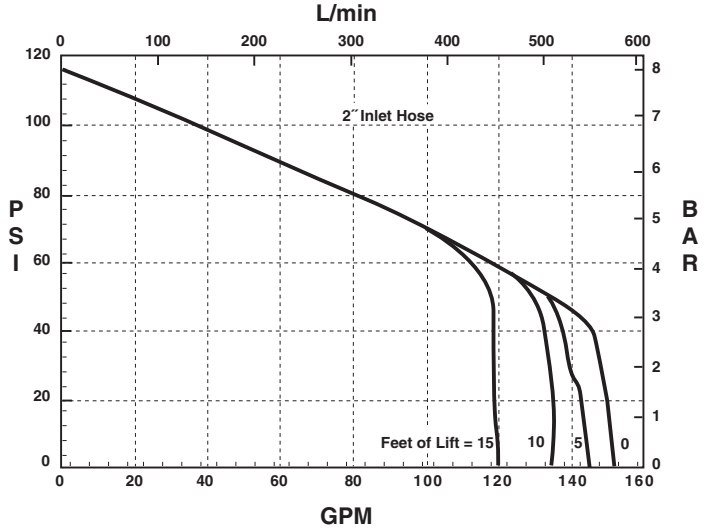


### 9305C-HM3C-SP, BSP Performance at 18 GPM

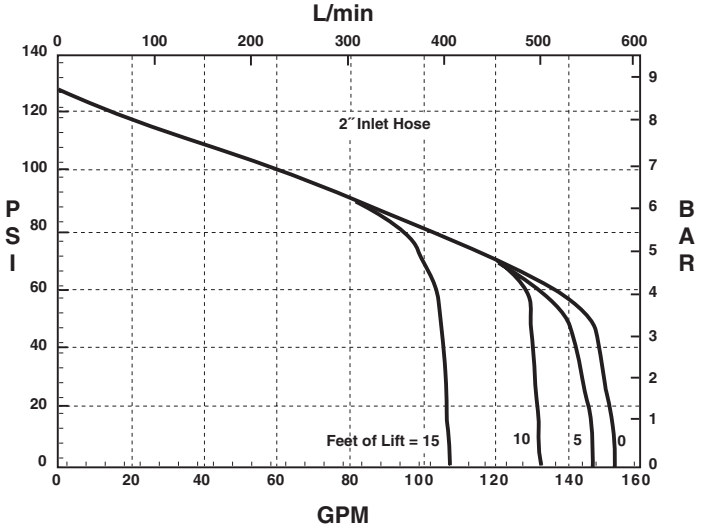


### 9305C-HM3C-SP, BSP Performance at 19 GPM

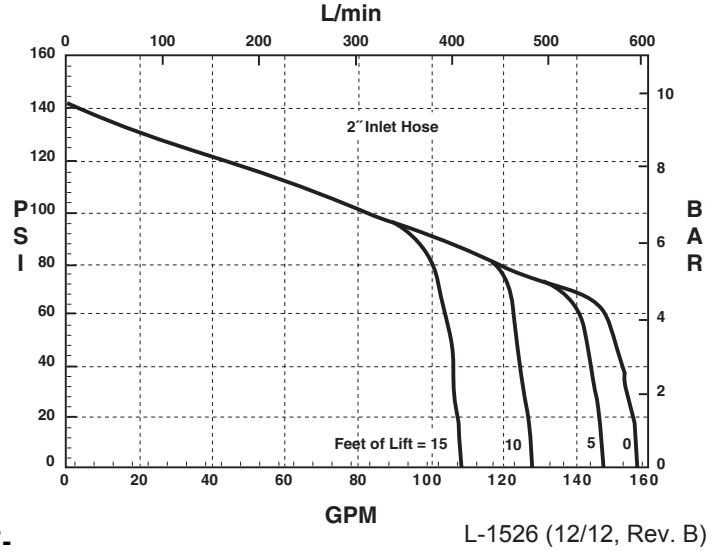

## 9306

### 9306C-HM1C & 9306S-HM1C

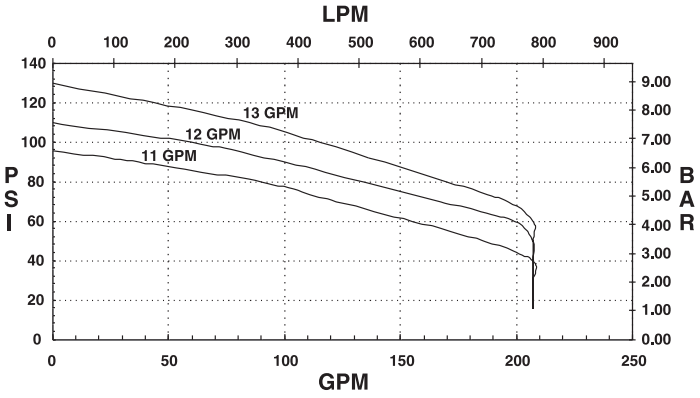


### 9306C-HM1C-3U & 9306S-HM1C-3U

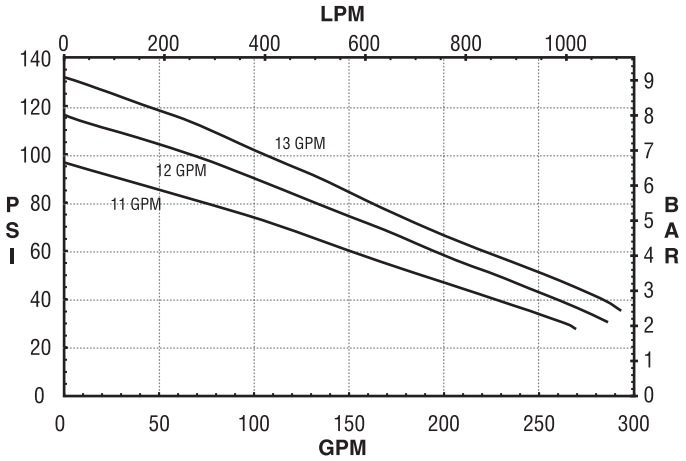


### 9306C-HM3C & 9306S-HM3C

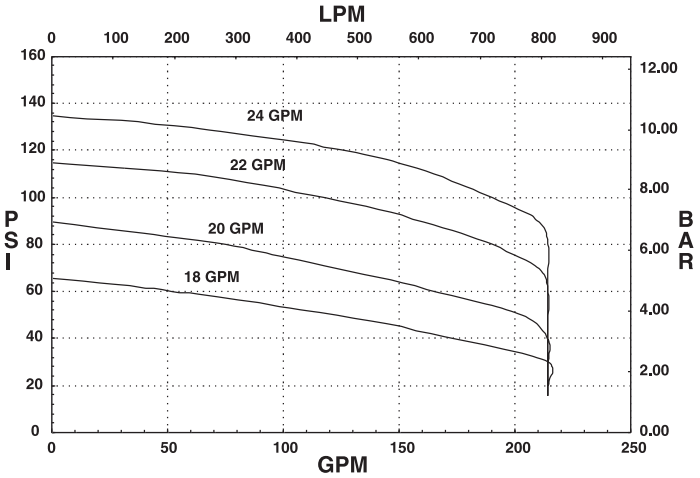


### 9306C-HM3C-3U & 9306S-HM3C-3U

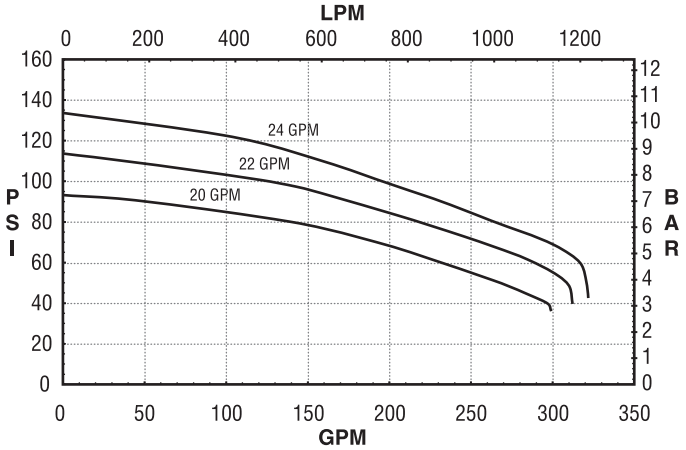


### 9306C-HM5C & 9306S-HM5C

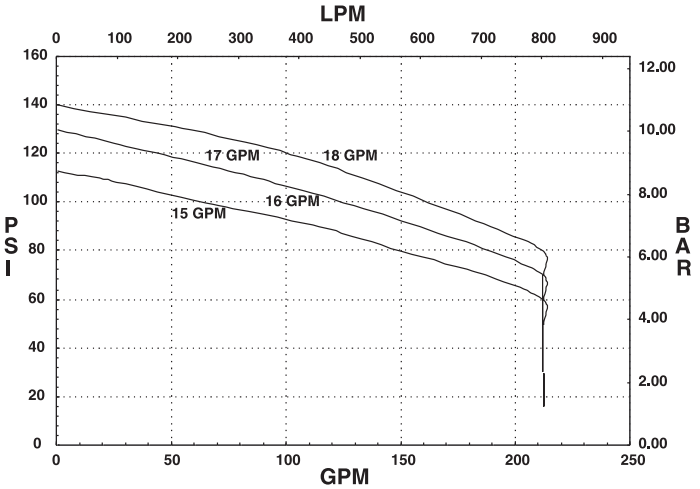


### 9306C-HM5C-3U & 9306S-HM5C-3U

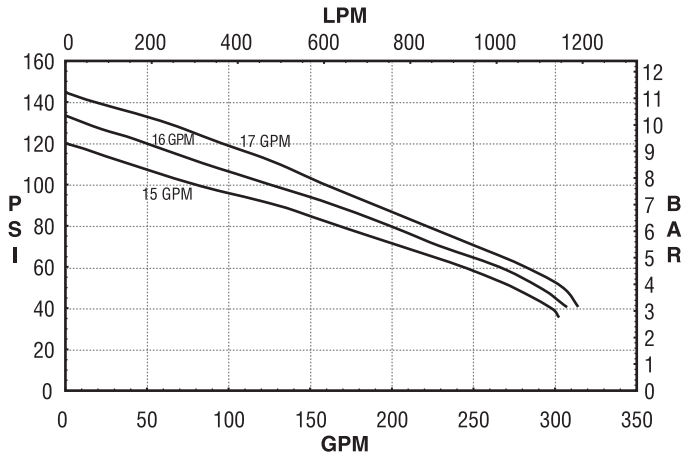

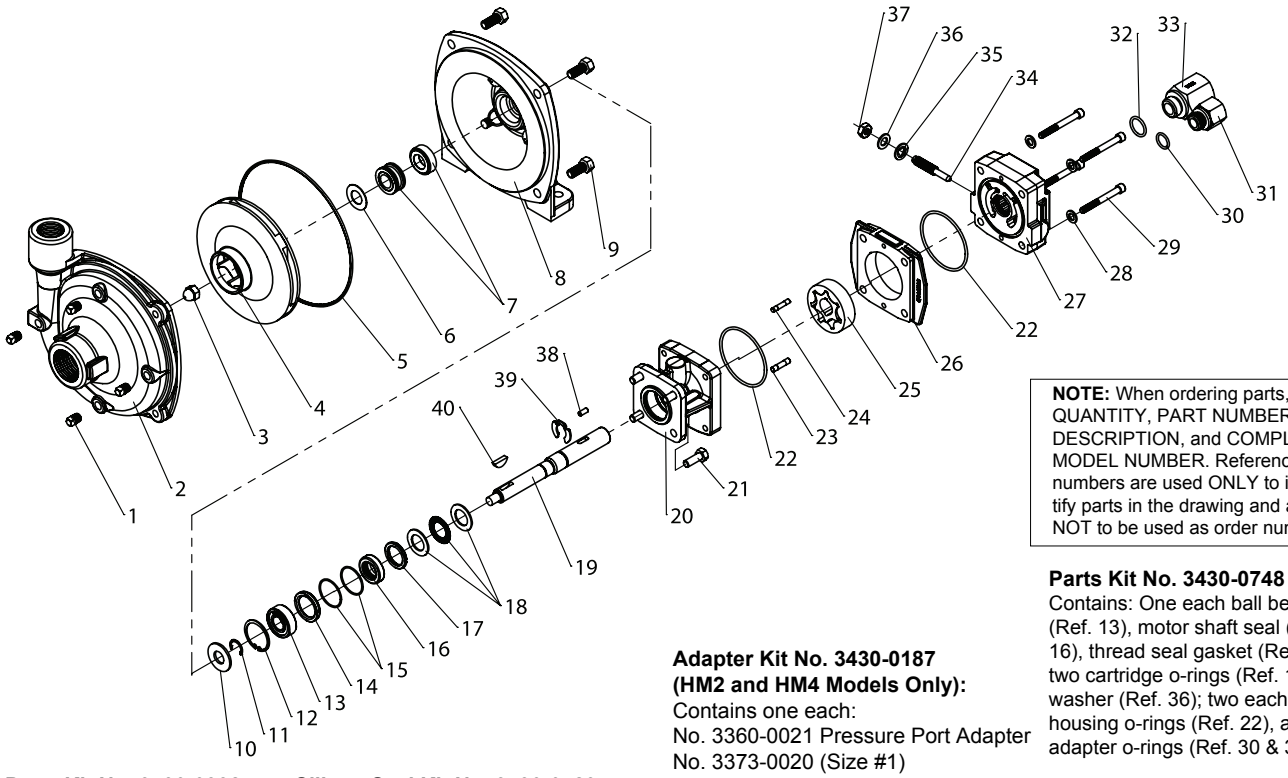


**NOTE:** When ordering parts, give QUANTITY, PART NUMBER, DESCRIPTION, and COMPLETE MODEL NUMBER. Reference numbers are used ONLY to identify parts in the drawing and are NOT to be used as order numbers.

**Parts Kit No. 3430-0748**
Contains: One each ball bearing (Ref. 13), motor shaft seal (Ref. 16), thread seal gasket (Ref. 35), two cartridge o-rings (Ref. 15) and washer (Ref. 36); two each motor housing o-rings (Ref. 22), and port adapter o-rings (Ref. 30 & 32).

**Repair Parts Kit No. 3430-0332**
Contains: One o-ring (Ref. 5), one rubber gasket (Ref. 6), and one mechanical seal (Ref. 7).

**Silicon Seal Kit No. 3430-0589**
Contains one each:
1720-0083 o-ring (Ref. 5)
and mechanical seal (silicon carbide) (Ref.7).

**Adapter Kit No. 3430-0187**
**(HM2 and HM4 Models Only):**
Contains one each:
No. 3360-0021 Pressure Port Adapter
No. 3373-0020 (Size #1)
No. 3373-0021 (Size #2)
No. 3373-0022 (Size #3)
No. 1720-0108 Adapter O-ring and
No. 1720-0105 Orifice O-ring (Qty. 3)

**Hydraulic Motor Part Nos.**
2500-0081C (HM1C Models)
2500-0082C (HM2C Models)
2500-0084C (HM4C Models)

| Ref. No. | Qty. Req'd. | Part No. | Description |
|---|---|---|---|
| 1 | 4 | 2406-0007 | Drain/Vent Plug (9302C) |
| 1 | 4 | 2406-0016 | Drain/Vent Plug (9302S) |
| 2 | 1 | 0150-9200C | Pump Casing (Model 9302C) |
| 2A | 1 | 0156-9200S | Pump Casing (Model 9302S) |
| 3 | 1 | 2253-0002 | Impeller Nut (9302C) |
| 3 | 1 | 2253-0006 | Impeller Nut (9302S) |
| 4 | 1 | 0401-9100P | Impeller (Nylon Std. 9302C) |
| 4 | 1 | 0402-9100P | Impeller (Polypropylene Optional) (Std 9302S) |
| 5 | 1 | 1720-0083 | O-ring |
| 6 | 1 | 1700-0100 | Gasket |
| 7 | 1 | 2120-0009 | Mechanical Seal (Viton/Ceramic) (Std 9302C) |
| 7 | 1 | 3430-0589 | Mechanical Seal (Silicon Carbide) (Std 9302S) |
| 8 | 1 | 0750-9300C | Mounting Flange (9302C) |
| 8 | 1 | 0756-9300S | Mounting Flange (9302S) |
| 9 | 4 | 2210-0020 | Hex Head Cap Screw (9302C) |
| 9 | 4 | 2210-0125 | Hex Head Cap Screw (9302S) |
| 10 | 1 | 1410-0056 | Slinger Ring |
| 11 | 1 | 1810-0014 | Snap Ring |
| 12 | 1 | 1820-0013 | Retaining Ring |
| 13 | 1 | 2000-0010 | Ball Bearing |
| 14 | 1 | 1410-0131 | Cartridge, Front |
| 15 | 2 | 1720-0268 | O-ring |
| 16 | 1 | 2104-0010 | Lip Seal |
| 17 | 1 | 1410-0130 | Seal Spacer |
| 18 | 1 | 2029-0014 | Thrust Bearing Assembly |
| 19 | 1 | 0531-2500 | Shaft (HM2C/HM4C) |
| 19 | 1 | 0533-2500 | Shaft (HM1C) |
| 20 | 1 | 0150-2500C | Motor Body (includes needle bearing) |
| 21 | 4 | 2210-0005 | Hex Head Cap Screw |

| Ref. No. | Qty. Req'd. | Part No. | Description |
|---|---|---|---|
| 22 | 2 | 1720-0110 | O-ring |
| 23 | 1 | 1600-0045 | Dowel Pin (HM2C / HM4C) |
| 23 | 1 | 1600-0044 | Dowel Pin (HM1C) |
| 24 | 1 | 1600-0042 | Dowel Pin (HM2C / HM4C) |
| 24 | 1 | 1600-0037 | Dowel Pin (HM1C) |
| 25 | 1 | 3900-0022 | Gerotor (HM1C) |
| 25 | 1 | 3900-0023 | Gerotor (HM2C) |
| 25 | 1 | 3900-0025 | Gerotor (HM4C) |
| 26 | 1 | 0701-2500C1 | Gerotor Housing (HM2C Models) 1/4" wide |
| 26 | 1 | 0700-2500C1 | Gerotor Housing (HM1C Models) 1/2" wide |
| 26 | 1 | 0703-2500C1 | Gerotor Housing (HM4C Models) 5/16" wide |
| 27 | 1 | 0254-2500C2 | Motor End Plate (includes needle bearing) |
| 28 | 4 | 2270-0039 | Washer |
| 29 | 4 | 2220-0045 | Cap Screw (HM2C / HM4C Models) |
| 29 | 4 | 2220-0021 | Cap Screw (HM1C Models) |
| 30 | 1 | 1720-0108 | O-ring |
| 31 | 1 | 3360-0021A | Pressure Port Adapter (includes o-ring) |
| 32 | 1 | 1720-0262 | O-ring |
| 33 | 1 | 3320-0051A | Tank Port Adapter (includes o-ring) |
| 34 | 1 | 3220-0029 | Bypass Adjusting Screw |
| 35 | 1 | 1700-0047 | Gasket |
| 36 | 1 | 2270-0027 | Washer |
| 37 | 1 | 2250-0038 | Lock Nut |
| 38 | 1 | 1610-0032 | Roll Pin (HM2C / HM4C) |
| 38 | 1 | 1610-0031 | Roll Pin (HM1C) |
| 39 | 1 | 1810-0026 | Snap Ring |
| 40 | 1 | 1610-0012 | Woodruff Key (9302C) |
| 40 | 1 | 04432 | Woodruff Key (9302S) |

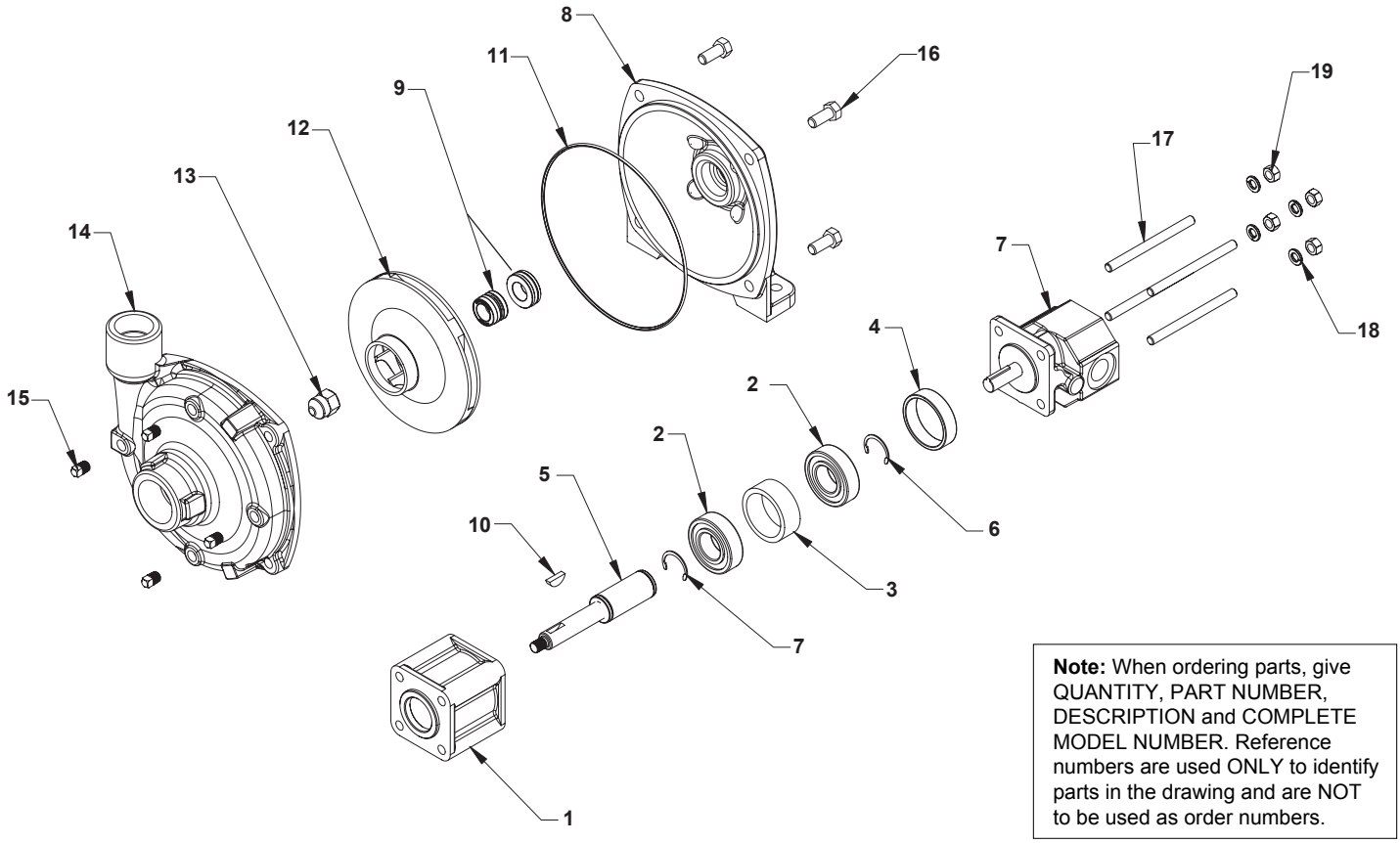


**Note:** When ordering parts, give QUANTITY, PART NUMBER, DESCRIPTION and COMPLETE MODEL NUMBER. Reference numbers are used ONLY to identify parts in the drawing and are NOT to be used as order numbers.

**Note 1:** Mechanical Seal Ref. 9 is not available outside of the kit form. For replacement seal, order Kit #3430-0332 or Kit #3430-0589 for Model 9302CT-GM1 and Kit #3430-0589 for Model 9302ST-GM1.

Hydraulic Motor Seal Kit No. 3430-0649

| Ref. No. | Qty. | Part No. | Description |
|---|---|---|---|
| 1 | 1 | 0701-9300C | Bearing Housing |
| 2 | 2 | 2008-0001 | Bearing |
| 3 | 1 | 1410-0108 | Bearing Spacer |
| 4 | 1 | 1410-0110 | Motor Pilot Ring |
| 5 | 1 | 0517-2500 | Shaft Assembly |
| 6 | 2 | 1810-0013 | Retainer Ring |
| 7 | 1 | 2500-0033 | Hydraulic Gear Motor |
| 8 | 1 | 0750-9300C2 | Mounting Flange |
| 8* | 1 | 0756-9300S | Mounting Flange |
| 9 | 1 | **See Note 1** | Mechanical Seal |
| 9* | 1 | **See Note 1** | Mechanical Seal |
| 10 | 1 | 1610-0012 | Key |
| 10* | 1 | 04432 | Key |

| Ref. No. | Qty. | Part No. | Description |
|---|---|---|---|
| 11 | 1 | 1720-0083 | O-Ring |
| 12 | 1 | 0401-9100P | Impeller (Nylaglass) |
| 12* | 1 | 0402-9100P | Impeller (Polypropylene) |
| 13 | 1 | 2253-0006 | Acorn Nut |
| 14 | 1 | 0150-9200C2 | Pump Casing |
| 14* | 1 | 0156-9200S1 | Pump Casing |
| 15 | 4 | 2406-0007 | Pipe Plug |
| 15* | 4 | 2406-0016 | Pipe Plug |
| 16 | 4 | 2210-0020 | Hex Head Cap Screw |
| 16* | 4 | 2210-0125 | Hex Head Cap Screw |
| 17 | 4 | 2210-0130 | Threaded Stud |
| 18 | 4 | 2260-0002 | Lockwasher |
| 19 | 4 | 2250-0008 | Nut |

* Denotes part for 9302ST-GM1.

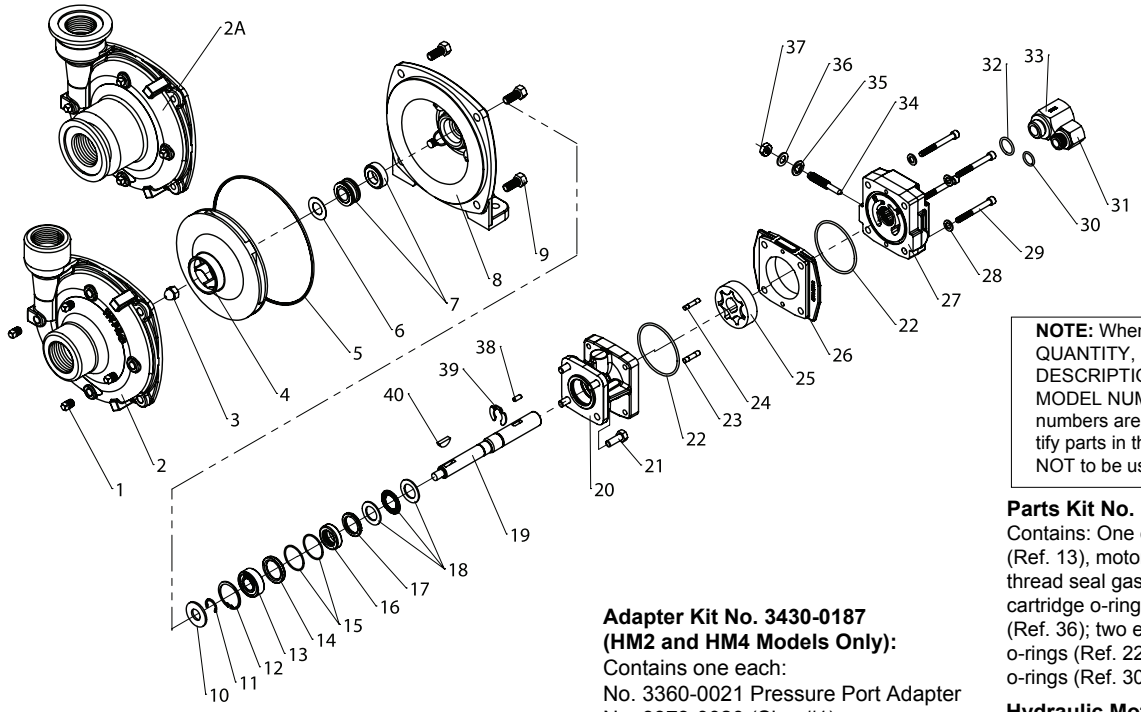


**NOTE:** When ordering parts, give QUANTITY, PART NUMBER, DESCRIPTION, and COMPLETE MODEL NUMBER. Reference numbers are used ONLY to identify parts in the drawing and are NOT to be used as order numbers.

**Parts Kit No. 3430-0748**
Contains: One each ball bearing (Ref. 13), motor shaft seal (Ref. 16), thread seal gasket (Ref. 35), two cartridge o-rings (Ref. 15) and washer (Ref. 36); two each motor housing o-rings (Ref. 22), and port adapter o-rings (Ref. 30 & 32).

**Hydraulic Motor Part Nos.**
2500-0081C (HM1C Models)
2500-0082C (HM2C Models)
2500-0083C (HM3C Models)
2500-0084C (HM4C Models)
2500-0085C (HM5C Models)

**Adapter Kit No. 3430-0187 (HM2 and HM4 Models Only):**
Contains one each:
No. 3360-0021 Pressure Port Adapter
No. 3373-0020 (Size #1)
No. 3373-0021 (Size #2)
No. 3373-0022 (Size #3).
No. 1720-0108 Adapter O-ring and
No. 1720-0105 Orifice O-ring (Qty 3).

**Repair Parts Kit No. 3430-0332**
Contains: One o-ring (Ref. 5), one rubber gasket (Ref. 6), and one mechanical seal (Ref. 7).

**Silicon Seal Kit No. 3430-0589**
Contains one each:
1720-0083 o-ring (Ref. 5)
and one mechanical seal (silicon carbide) (Ref.7).

| Ref. No. | Qty. Req'd. | Part No. | Description |
|---|---|---|---|
| 1 | 4 | 2406-0007 | Drain/Vent Plug (9303C) |
| 1 | 4 | 2406-0016 | Drain/Vent Plug (9303S) |
| 2 | 1 | 0150-9000C | Pump Casing (Model 9303C) |
| 2 | 1 | 0150-9000S | Pump Casing (Model 9303S) |
| 2A | 1 | 0153-9000C | Pump Casing (Universal Flange Model C-U) |
| 2A | 1 | 0153-9000S | Pump Casing (Universal Flange Model S-U) |
| 3 | 1 | 2253-0002 | Impeller Nut (9303C) |
| 3 | 1 | 2253-0006 | Impeller Nut (9303S) |
| 4 | 1 | 0401-9100P | Impeller (Nylon Std. 9303C) |
| 4 | 1 | 0402-9100P | Impeller (Polypropylene Optional) (Std 9303S) |
| 5 | 1 | 1720-0083 | O-ring |
| 6 | 1 | 1700-0100 | Gasket |
| 7 | 1 | 2120-0009 | Mechanical Seal (Viton/Ceramic) (Std 9303C) |
| 7 | 1 | 3430-0589 | Mechanical Seal (Silicon Carbide) (Std 9303S) |
| 8 | 1 | 0750-9300C | Mounting Flange (9303C) |
| 8 | 1 | 0756-9300S | Mounting Flange (9303S) |
| 9 | 4 | 2210-0020 | Hex Head Cap Screw (9303C) |
| 9 | 4 | 2210-0125 | Hex Head Cap Screw (9303S) |
| 10 | 1 | 1410-0056 | Slinger Ring |
| 11 | 1 | 1810-0014 | Snap Ring |
| 12 | 1 | 1820-0013 | Retaining Ring |
| 13 | 1 | 2000-0010 | Ball Bearing |
| 14 | 1 | 1410-0131 | Cartridge, Front |
| 15 | 2 | 1720-0268 | O-ring |
| 16 | 1 | 2104-0010 | Lip Seal |
| 17 | 1 | 1410-0130 | Seal Spacer |
| 18 | 1 | 2029-0014 | Thrust Bearing Assembly |
| 19 | 1 | 0531-2500 | Shaft (HM2C/HM4C) |
| 19 | 1 | 0533-2500 | Shaft (HM1C/HM5C) |
| 19 | 1 | 0536-2500 | Shaft (HM3C) |
| 20 | 1 | 0150-2500C | Motor Body (includes needle bearing) |
| 21 | 4 | 2210-0005 | Hex Head Cap Screw |
| 22 | 2 | 1720-0110 | O-ring |
| 23 | 1 | 1600-0045 | Dowel Pin (HM2C / HM4C) |
| 23 | 1 | 1600-0044 | Dowel Pin (HM1C/HM5C) |

| Ref. No. | Qty. Req'd. | Part No. | Description |
|---|---|---|---|
| 23 | 1 | 1600-0052 | Dowel Pin (HM3C) |
| 24 | 1 | 1600-0042 | Dowel Pin (HM2C / HM4C) |
| 24 | 1 | 1600-0037 | Dowel Pin (HM1C/HM5C) |
| 24 | 1 | 1600-0068 | Dowel Pin (HM3C) |
| 25 | 1 | 3900-0022 | Gerotor (HM1C) |
| 25 | 1 | 3900-0023 | Gerotor (HM2C) |
| 25 | 1 | 3900-0024 | Gerotor (HM3C) |
| 25 | 1 | 3900-0025 | Gerotor (HM4C) |
| 25 | 1 | 3900-0048 | Gerotor (HM5C) |
| 26 | 1 | 0701-2500C1 | Gerotor Housing (HM2C Models) 1/4" wide |
| 26 | 1 | 0700-2500C1 | Gerotor Housing (HM1C Models) 1/2" wide |
| 26 | 1 | 0703-2500C1 | Gerotor Housing (HM4C Models) 5/16" wide |
| 26 | 1 | 0702-2500C1 | Gerotor Housing (HM3C Models) 1" wide |
| 26 | 1 | 0704-2500C1 | Gerotor Housing (HM5C Models) 5/8" wide |
| 27 | 1 | 0254-2500C2 | Motor End Plate (includes needle bearing) |
| 28 | 4 | 2270-0039 | Washer |
| 29 | 4 | 2220-0045 | Cap Screw (HM2C / HM4C Models) |
| 29 | 4 | 2220-0021 | Cap Screw (HM1C Models) |
| 29 | 4 | 2220-0044 | Cap Screw (HM3C Models) |
| 29 | 4 | 2220-0032 | Cap Screw (HM5C Models) |
| 30 | 1 | 1720-0108 | O-ring |
| 31 | 1 | 3360-0021A | Pressure Port Adapter (includes o-ring) |
| 32 | 1 | 1720-0262 | O-ring |
| 33 | 1 | 3320-0051A | Tank Port Adapter (includes o-ring) |
| 34 | 1 | 3220-0029 | Bypass Adjusting Screw |
| 35 | 1 | 1700-0047 | Gasket |
| 36 | 1 | 2270-0027 | Washer |
| 37 | 1 | 2250-0038 | Lock Nut |
| 38 | 1 | 1610-0032 | Roll Pin (HM2C / HM4C) |
| 38 | 1 | 1610-0031 | Roll Pin (HM1C / HM5C) |
| 38 | 1 | 1610-0055 | Roll Pin (HM3C) |
| 39 | 1 | 1810-0026 | Snap Ring |
| 40 | 1 | 1610-0012 | Woodruff Key (9303C) |
| 40 | 1 | 04432 | Woodruff Key (9303S) |

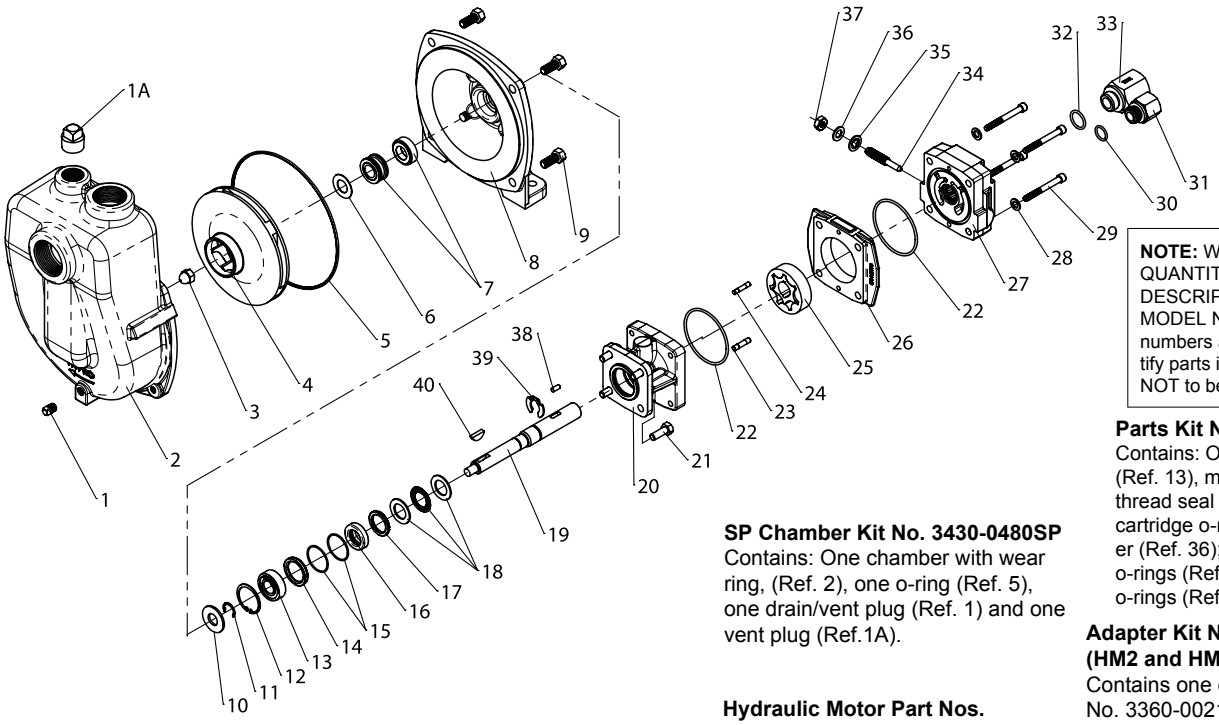


**NOTE:** When ordering parts, give QUANTITY, PART NUMBER, DESCRIPTION, and COMPLETE MODEL NUMBER. Reference numbers are used ONLY to identify parts in the drawing and are NOT to be used as order numbers.

**Parts Kit No. 3430-0748**
Contains: One each ball bearing (Ref. 13), motor shaft seal (Ref. 16), thread seal gasket (Ref. 35), two cartridge o-rings (Ref. 15) and washer (Ref. 36); two each motor housing o-rings (Ref. 22), and port adapter o-rings (Ref. 30 & 32).

**SP Chamber Kit No. 3430-0480SP**
Contains: One chamber with wear ring, (Ref. 2), one o-ring (Ref. 5), one drain/vent plug (Ref. 1) and one vent plug (Ref.1A).

**Adapter Kit No. 3430-0187 (HM2 and HM4 Models Only):**
Contains one each:
No. 3360-0021 Pressure Port Adapter
No. 3373-0020 (Size #1)
No. 3373-0021 (Size #2)
No. 3373-0022 (Size #3)
No. 1720-0108 Adapter O-ring and
No. 1720-0105 Orifice O-ring (Qty. 3).

**Hydraulic Motor Part Nos.**
2500-0081C (HM1C Models)
2500-0082C (HM2C Models)
2500-0083C (HM3C Models)
2500-0084C (HM4C Models)
2500-0085C (HM5C Models)

**Repair Parts Kit No. 3430-0332**
Contains: One o-ring (Ref. 5), one rubber gasket (Ref. 6), and one mechanical seal (Ref 7).

**Silicon Seal Kit No. 3430-0589**
Contains one each:
1720-0083 o-ring (Ref. 5) and mechanical seal (silicon carbide) (Ref. 7).

| Ref. No. | Qty. Req'd. | Part No. | Description |
|---|---|---|---|
| 1 | 1 | 2406-0007 | Drain/Vent Plug (9303C-SP) |
| 1 | 1 | 2406-0016 | Drain/Vent Plug (9303S-SP) |
| 1A | 1 | 2406-0001 | Vent Plug (9303C-SP) |
| 1A | 1 | 7SP34 | Vent Plug (9303S-SP) |
| 2 | 1 | 3430-0480SP | Pump Casing (9303C-SP) |
| 2 | 1 | 0150-9070S | Pump Casing (9303S-SP) |
| 3 | 1 | 2253-0002 | Impeller Nut (9303C-SP) |
| 3 | 1 | 2253-0006 | Impeller Nut (9303S-SP) |
| 4 | 1 | 0401-9100P | Impeller (Nylon Std. 9303C-SP) |
| 4 | 1 | 0402-9100P | Impeller (Polypropylene Optional) (Std 9303S-SP) |
| 5 | 1 | 1720-0083 | O-ring |
| 6 | 1 | 1700-0100 | Gasket |
| 7 | 1 | 2120-0009 | Mechanical Seal (Viton/Ceramic) (Std 9303C-SP) |
| 7 | 1 | 3430-0589 | Mechanical Seal (Silicon Carbide) (Std 9303S-SP) |
| 8 | 1 | 0750-9300C | Mounting Flange (9303C-SP) |
| 8 | 1 | 0756-9300S | Mounting Flange (9303S-SP) |
| 9 | 4 | 2210-0020 | Hex Head Cap Screw (9303C-SP) |
| 9 | 4 | 2210-0125 | Hex Head Cap Screw (9303S-SP) |
| 10 | 1 | 1410-0056 | Slinger Ring |
| 11 | 1 | 1810-0014 | Snap Ring |
| 12 | 1 | 1820-0013 | Retaining Ring |
| 13 | 1 | 2000-0010 | Ball Bearing |
| 14 | 1 | 1410-0131 | Cartridge, Front |
| 15 | 2 | 1720-0268 | O-ring |
| 16 | 1 | 2104-0010 | Lip Seal |
| 17 | 1 | 1410-0130 | Seal Spacer |
| 18 | 1 | 2029-0014 | Thrust Bearing Assembly |
| 19 | 1 | 0531-2500 | Shaft (HM2C/HM4C) |
| 19 | 1 | 0533-2500 | Shaft (HM1C/HM5C) |
| 19 | 1 | 0536-2500 | Shaft (HM3C) |
| 20 | 1 | 0150-2500C | Motor Body (includes needle bearing) |
| 21 | 4 | 2210-0005 | Hex Head Cap Screw |
| 22 | 2 | 1720-0110 | O-ring |
| 23 | 1 | 1600-0045 | Dowel Pin (HM2C/HM4C) |

| Ref. No. | Qty. Req'd. | Part No. | Description |
|---|---|---|---|
| 23 | 1 | 1600-0044 | Dowel Pin (HM1C/HM5C) |
| 23 | 1 | 1600-0052 | Dowel Pin (HM3C) |
| 24 | 1 | 1600-0042 | Dowel Pin (HM2C/HM4C) |
| 24 | 1 | 1600-0037 | Dowel Pin (HM1C/HM5C) |
| 24 | 1 | 1600-0068 | Dowel Pin (HM3C) |
| 25 | 1 | 3900-0022 | Gerotor (HM1C) |
| 25 | 1 | 3900-0023 | Gerotor (HM2C) |
| 25 | 1 | 3900-0024 | Gerotor (HM3C) |
| 25 | 1 | 3900-0025 | Gerotor (HM4C) |
| 25 | 1 | 3900-0048 | Gerotor (HM5C) |
| 26 | 1 | 0701-2500C1 | Gerotor Housing (HM2C Models) 1/4" wide |
| 26 | 1 | 0700-2500C1 | Gerotor Housing (HM1C Models) 1/2" wide |
| 26 | 1 | 0703-2500C1 | Gerotor Housing (HM4C Models) 5/16" wide |
| 26 | 1 | 0702-2500C1 | Gerotor Housing (HM3C Models) 1" wide |
| 26 | 1 | 0704-2500C1 | Gerotor Housing (HM5C Models) 5/8" wide |
| 27 | 1 | 0254-2500C2 | Motor End Plate (includes needle bearing) |
| 28 | 4 | 2270-0039 | Washer |
| 29 | 4 | 2220-0045 | Cap Screw (HM2C/HM4C Models) |
| 29 | 4 | 2220-0021 | Cap Screw (HM1C Models) |
| 29 | 4 | 2220-0044 | Cap Screw (HM3C Models) |
| 29 | 4 | 2220-0032 | Cap Screw (HM5C Models) |
| 30 | 1 | 1720-0108 | O-ring |
| 31 | 1 | 3360-0021A | Pressure Port Adapter (includes o-ring) |
| 32 | 1 | 1720-0262 | O-ring |
| 33 | 1 | 3320-0051A | Tank Port Adapter (includes o-ring) |
| 34 | 1 | 3220-0029 | Bypass Adjusting Screw |
| 35 | 1 | 1700-0047 | Gasket |
| 36 | 1 | 2270-0027 | Washer |
| 37 | 1 | 2250-0038 | Lock Nut |
| 38 | 1 | 1610-0032 | Roll Pin (HM2C/HM4C) |
| 38 | 1 | 1610-0031 | Roll Pin (HM1C/HM5C) |
| 38 | 1 | 1610-0055 | Roll Pin (HM3C) |
| 39 | 1 | 1810-0026 | Snap Ring |
| 40 | 1 | 1610-0012 | Woodruff Key (9303C-SP) |
| 40 | 1 | 04432 | Woodruff Key (9303S-SP) |

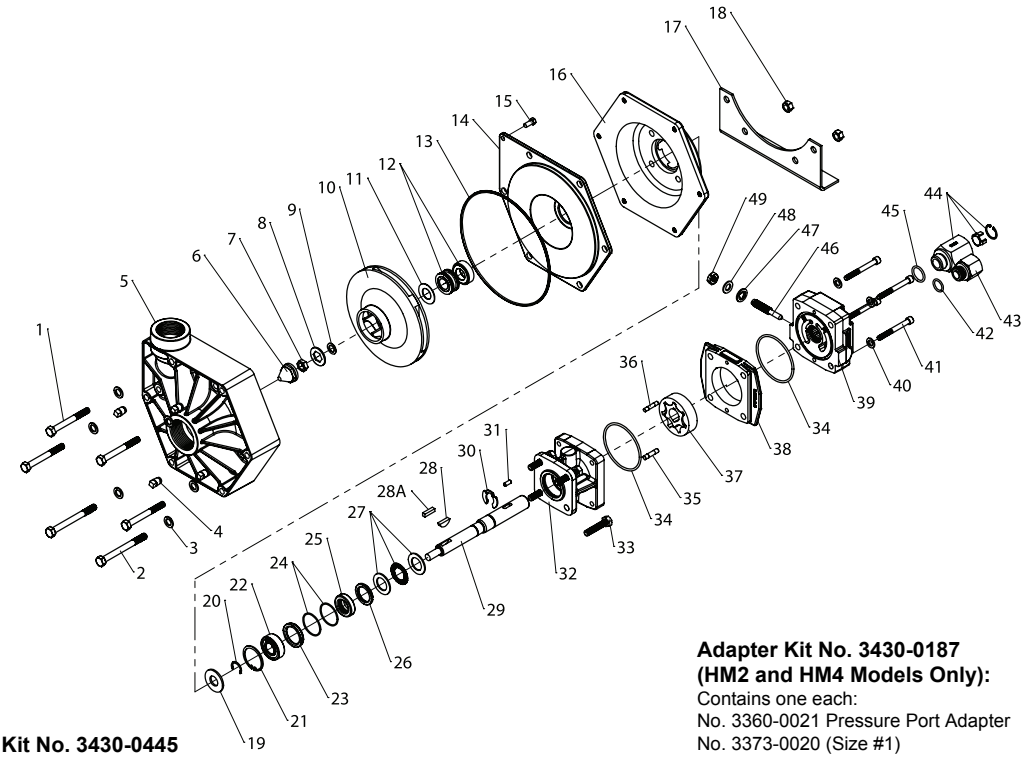


**NOTE:** When ordering parts, give QUANTITY, PART NUMBER, DESCRIPTION, and COMPLETE MODEL NUMBER. Reference numbers are used ONLY to identify parts in the drawing and are NOT to be used as order numbers.

**Parts Kit No. 3430-0748**
Contains: One each ball bearing (Ref. 22), motor shaft seal (Ref. 25), thread seal gasket (Ref. 47), two cartridge o-rings (Ref. 24) and washer (Ref. 48); two each motor housing o-rings (Ref. 34), and port adapter o-rings (Ref. 42 & 45).

**Adapter Kit No. 3430-0187 (HM2 and HM4 Models Only):**
Contains one each:
No. 3360-0021 Pressure Port Adapter
No. 3373-0020 (Size #1)
No. 3373-0021 (Size #2)
No. 3373-0022 (Size #3)
No. 1720-0108 Adapter O-ring and
No. 1720-0105 Orifice O-ring (Qty. 3).

**Hydraulic Motor Part Nos.**
2500-0181C (HM1C Models)
2500-0182C (HM2C Models)
2500-0183C (HM3C Models)
2500-0184C (HM4C Models)
2500-0185C (HM5C Models)

**Repair Parts Kit No. 3430-0445**
Contains: One o-ring (Ref. 13), one rubber gasket (Ref. 11), one mechanical seal (Ref. 12), one gasket (Ref. 8) and one washer (Ref. 9).

**Silicon Seal Parts Kit # 3430-0593**
Contains one each:
mechanical seal (Ref. 12) and o-ring (Ref. 13).

| Ref. No. | Qty. Req'd. | Part No. | Description |
|---|---|---|---|
| 1 | 4 | 2210-0087 | Hex Head Cap Screw |
| 2 | 2 | 2210-0016 | Hex Head Cap Screw (Base Only) |
| 3 | 6 | 2270-0041 | Washer |
| 4 | 4 | 2406-0020 | Pipe Plug |
| 5 | 1 | 0700-9000P | Pump Casing |
| 6 | 1 | 2250-0052 | Impeller Nut |
| 7 | 1 | 2250-0051 | Jam Nut |
| 8 | 1 | 1700-0097 | Gasket (Viton) |
| 9 | 1 | 2270-0057 | Washer |
| 10 | 1 | 0402-9100P | Impeller |
| 11 | 1 | 1700-0100 | Rubber Gasket |
| 12 | 1 | 2120-0009 | Mechanical Seal (Viton/Ceramic) (Std 9303P) |
| 12 | 1 | 3430-0593 | Mechanical Seal (Silicon Carbide) (Optional) |
| 13 | 1 | 1721-0083 | O-ring |
| 14 | 1 | 0750-9300P | Cover |
| 15 | 1 | 2210-0088 | Screw |
| 16 | 1 | 0750-9006C | Intermediate Flange |
| 17 | 1 | 1510-0063 | Base Plate |
| 18 | 2 | 2250-0008 | Hex Nut |
| 19 | 1 | 1410-0056 | Slinger Ring |
| 20 | 1 | 1810-0014 | Snap Ring |
| 21 | 1 | 1820-0013 | Retaining Ring |
| 22 | 1 | 2000-0010 | Ball Bearing |
| 23 | 1 | 1410-0131 | Cartridge, Front |
| 24 | 2 | 1720-0268 | O-ring |
| 25 | 1 | 2104-0010 | Lip Seal |
| 26 | 1 | 1410-0130 | Seal Spacer |
| 27 | 1 | 2029-0014 | Thrust Bearing Assembly |
| 28 | 1 | 1610-0042 | Woodruff Key (9303P all except HM3C) |
| 28A | 1 | 1610-0053 | Square Key (9303P-HM3C Only) |
| 29 | 1 | 0534-2500 | Shaft (HM2C/HM4C) |
| 29 | 1 | 0535-2500 | Shaft (HM1C/HM5C) |
| 29 | 1 | 0537-2500 | Shaft (HM3C) |
| 30 | 1 | 1810-0026 | Snap Ring |
| 31 | 1 | 1610-0032 | Roll Pin (HM2C / HM4C) |
| 31 | 1 | 1610-0031 | Roll Pin (HM1C / HM5C) |

| Ref. No. | Qty. Req'd. | Part No. | Description |
|---|---|---|---|
| 31 | 1 | 1610-0055 | Roll Pin (HM3C) |
| 32 | 1 | 0150-2500C | Motor Body (includes needle bearing) |
| 33 | 4 | 2210-0021 | Hex Head Cap Screw |
| 34 | 2 | 1720-0110 | O-ring |
| 35 | 1 | 1600-0045 | Dowel Pin (HM2C / HM4C) |
| 35 | 1 | 1600-0044 | Dowel Pin (HM1C/HM5C) |
| 35 | 1 | 1600-0052 | Dowel Pin (HM3C) |
| 36 | 1 | 1600-0042 | Dowel Pin (HM2C/ HM4C) |
| 36 | 1 | 1600-0037 | Dowel Pin (HM1C/HM5C) |
| 36 | 1 | 1600-0068 | Dowel Pin (HM3C) |
| 37 | 1 | 3900-0022 | Gerotor (HM1C) |
| 37 | 1 | 3900-0023 | Gerotor (HM2C) |
| 37 | 1 | 3900-0024 | Gerotor (HM3C) |
| 37 | 1 | 3900-0025 | Gerotor (HM4C) |
| 37 | 1 | 3900-0048 | Gerotor (HM5C) |
| 38 | 1 | 0701-2500C1 | Gerotor Housing (HM2C Models) 1/4" wide |
| 38 | 1 | 0700-2500C1 | Gerotor Housing (HM1C Models) 1/2" wide |
| 38 | 1 | 0703-2500C1 | Gerotor Housing (HM4C Models) 5/16" wide |
| 38 | 1 | 0702-2500C1 | Gerotor Housing (HM3C Models) 1" wide |
| 38 | 1 | 0704-2500C1 | Gerotor Housing (HM5C Models) 5/8" wide |
| 39 | 1 | 0254-2500C2 | Motor End Plate (includes needle bearing) |
| 40 | 4 | 2270-0039 | Washer |
| 41 | 4 | 2220-0045 | Cap Screw (HM2C / HM4C Models) |
| 41 | 4 | 2220-0021 | Cap Screw (HM1C Models) |
| 41 | 4 | 2220-0044 | Cap Screw (HM3C Models) |
| 41 | 4 | 2220-0032 | Cap Screw (HM5C Models) |
| 42 | 1 | 1720-0108 | O-ring |
| 43 | 1 | 3360-0021A | Pressure Port Adapter (includes o-ring) |
| 44 | 1 | 3320-0051A | Tank Port Adapter (includes o-ring) |
| 45 | 1 | 1720-0262 | O-ring |
| 46 | 1 | 3220-0029 | Bypass Adjusting Screw |
| 47 | 1 | 1700-0047 | Gasket |
| 48 | 1 | 2270-0027 | Washer |
| 49 | 1 | 2250-0038 | Lock Nut |

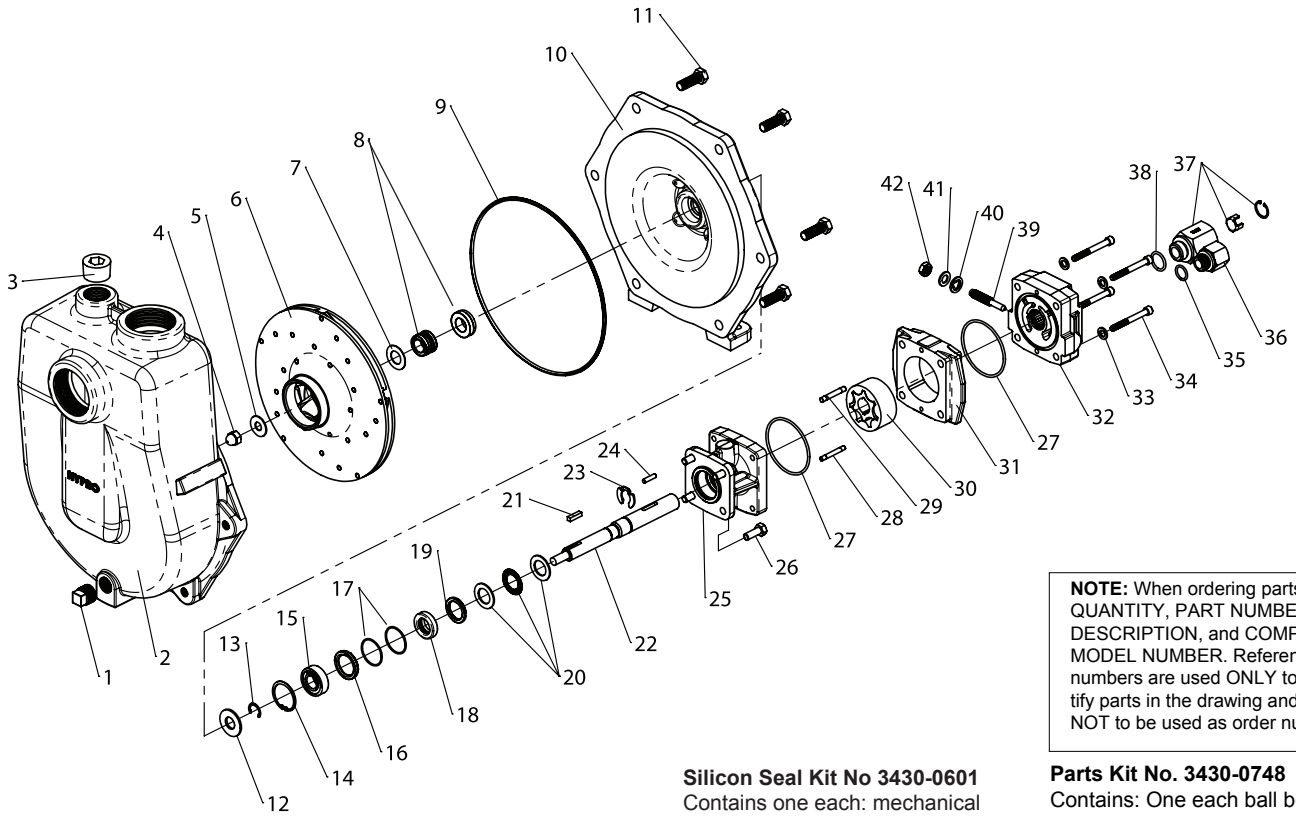


**NOTE:** When ordering parts, give QUANTITY, PART NUMBER, DESCRIPTION, and COMPLETE MODEL NUMBER. Reference numbers are used ONLY to identify parts in the drawing and are NOT to be used as order numbers.

**Silicon Seal Kit No 3430-0601**
Contains one each: mechanical seal (Ref. 8) and o-ring (Ref. 9).

**Repair Parts Kit No. 3430-0500**
Contains one each: mechanical seal (Ref. 8), o-ring (Ref. 9), and rubber gasket (Ref. 7).

**Parts Kit No. 3430-0748**
Contains: One each ball bearing (Ref. 15), motor shaft seal (Ref. 18), thread seal gasket (Ref. 40), two cartridge o-rings (Ref. 17) and washer (Ref. 41); two each motor housing o-rings (Ref. 27), and port adapter o-rings (Ref. 35 & 38).

**Hydraulic Motor Part No.**
2500-0083C

| Ref. No. | Qty. Req'd. | Part No. | Description |
|---|---|---|---|
| 1 | 1 | 2406-0002 | 1/2" NPT Drain Plug |
| 2 | 1 | 3430-0481SP | Self Priming Chamber (SP model only) Includes a stainless wear ring, plugs, & o-ring |
| 2 | 1 | 3430-0481BSP | Self Priming Chamber (BSP model only) Includes a stainless wear ring, plugs, & o-ring |
| 3 | 1 | 2406-0034 | 1" NPT Prime Port Plug (SP model only) |
| 3 | 1 | 2406-0036 | 1" BSP Prime Port Plug (BSP model only) |
| 4 | 1 | 2253-0002 | Impeller Nut |
| 5 | 1 | 2270-0071 | Washer |
| 6 | 1 | 0403-9200P1 | Impeller |
| 7 | 1 | 1700-0100 | Rubber Gasket |
| 8 | 1 | 2120-0009 | Mechanical Seal (Viton/Ceramic) (Std 9305C) |
| 8 | 1 | 3430-0601 | Mechanical Seal (Silicon Carbide) (Optional) |
| 9 | 1 | 1720-0180 | O-ring |
| 10 | 1 | 0752-9200C | Mounting Flange |
| 11 | 6 | 2210-0086 | Hex Head Cap Screw |
| 12 | 1 | 1410-0056 | Slinger Ring |
| 13 | 1 | 1810-0014 | Snap Ring |
| 14 | 1 | 1820-0013 | Retaining Ring |
| 15 | 1 | 2000-0010 | Ball Bearing |
| 16 | 1 | 1410-0131 | Cartridge, Front |
| 17 | 2 | 1720-0268 | O-ring |
| 18 | 1 | 2104-0010 | Lip Seal |
| 19 | 1 | 1410-0130 | Seal Spacer |

| Ref. No. | Qty. Req'd. | Part No. | Description |
|---|---|---|---|
| 20 | 1 | 2029-0014 | Thrust Bearing Assembly |
| 21 | 1 | 1610-0053 | Square Key |
| 22 | 1 | 0537-2500 | Shaft |
| 23 | 1 | 1810-0026 | Snap Ring |
| 24 | 1 | 1610-0055 | Roll Pin |
| 25 | 1 | 0150-2500C | Motor Body (includes needle bearing) |
| 26 | 4 | 2210-0005 | Hex Head Cap Screw |
| 27 | 2 | 1720-0110 | O-ring |
| 28 | 1 | 1600-0052 | Dowel Pin |
| 29 | 1 | 1600-0068 | Dowel Pin |
| 30 | 1 | 3900-0024 | Gerotor |
| 31 | 1 | 0702-2500C1 | Gerotor Housing 1" wide |
| 32 | 1 | 0254-2500C2 | Motor End Plate (includes needle bearing) |
| 33 | 4 | 2270-0039 | Washer |
| 34 | 4 | 2220-0044 | Cap Screw |
| 35 | 1 | 1720-0108 | O-ring |
| 36 | 1 | 3360-0021A | Pressure Port Adapter (includes o-ring) |
| 37 | 1 | 3320-0051A | Tank Port Adapter (includes o-ring) |
| 38 | 1 | 1720-0262 | O-ring |
| 39 | 1 | 3220-0029 | Bypass Adjusting Screw |
| 40 | 1 | 1700-0047 | Gasket |
| 41 | 1 | 2270-0027 | Washer |
| 42 | 1 | 2250-0038 | Lock Nut |

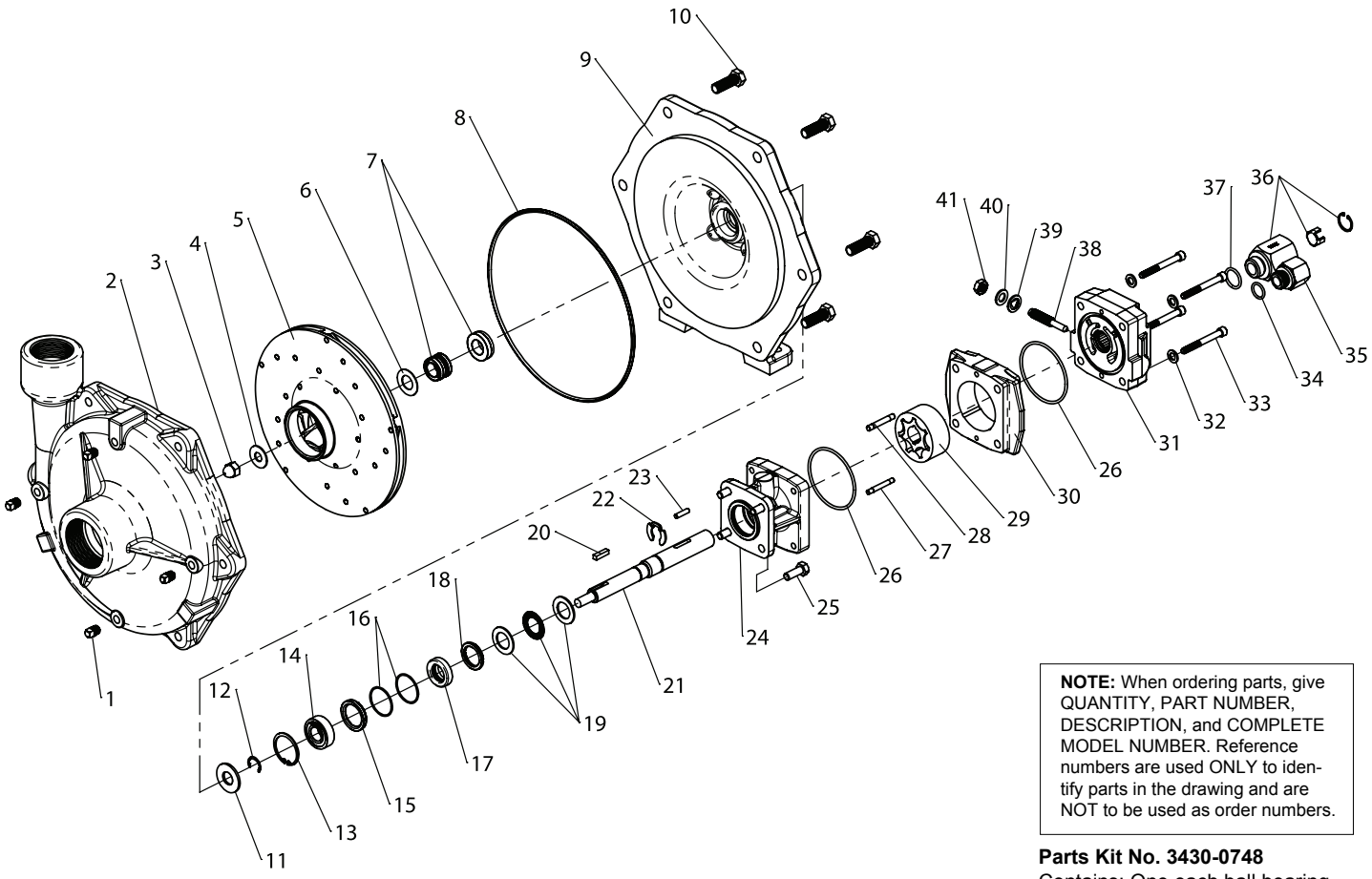


**NOTE:** When ordering parts, give QUANTITY, PART NUMBER, DESCRIPTION, and COMPLETE MODEL NUMBER. Reference numbers are used ONLY to identify parts in the drawing and are NOT to be used as order numbers.

**Hydraulic Motor Part No.**
2500-0083C

**Parts Kit No. 3430-0748**
Contains: One each ball bearing (Ref. 14), motor shaft seal (Ref. 17), thread seal gasket (Ref. 39), two cartridge o-rings (Ref. 16) and washer (Ref. 40); two each motor housing o-rings (Ref. 26), and port adapter o-rings (Ref. 34 & 37).

**Repair Parts Kit No. 3430-0500**
Contains one each: mechanical seal (Ref. 7), o-ring (Ref. 8), and rubber gasket (Ref. 6).

**Silicon Seal Kit No 3430-0601**
Contains one each: mechanical seal (Ref. 7) and O-ring (Ref. 8).

| Ref. No. | Qty. Req'd. | Part No. | Description |
|---|---|---|---|
| 1 | 4 | 2406-0007 | Drain / Vent Plug |
| 2 | 1 | 0152-9200C | Pump Casing |
| 3 | 1 | 2253-0002 | Impeller Nut |
| 4 | 1 | 2270-0071 | Washer |
| 5 | 1 | 0403-9200P1 | Impeller |
| 6 | 1 | 1700-0100 | Rubber Gasket |
| 7 | 1 | 2120-0009 | Mechanical Seal (Viton/Ceramic) (Std 9305C) |
| 7 | 1 | 3430-0601 | Mechanical Seal (Silicon Carbide) (Optional) |
| 8 | 1 | 1720-0180 | O-ring |
| 9 | 1 | 0752-9200C | Mounting Flange |
| 10 | 6 | 2210-0086 | Hex Head Cap Screw |
| 11 | 1 | 1410-0056 | Slinger Ring |
| 12 | 1 | 1810-0014 | Snap Ring |
| 13 | 1 | 1820-0013 | Retaining Ring |
| 14 | 1 | 2000-0010 | Ball Bearing |
| 15 | 1 | 1410-0131 | Cartridge, Front |
| 16 | 2 | 1720-0268 | O-ring |
| 17 | 1 | 2104-0010 | Lip Seal |
| 18 | 1 | 1410-0130 | Seal Spacer |
| 19 | 1 | 2029-0014 | Thrust Bearing Assembly |
| 20 | 1 | 1610-0053 | Square Key |

| Ref. No. | Qty. Req'd. | Part No. | Description |
|---|---|---|---|
| 21 | 1 | 0537-2500 | Shaft |
| 22 | 1 | 1810-0026 | Snap Ring |
| 23 | 1 | 1610-0055 | Roll Pin |
| 24 | 1 | 0150-2500C | Motor Body (includes needle bearing) |
| 25 | 4 | 2210-0005 | Hex Head Cap Screw |
| 26 | 2 | 1720-0110 | O-ring |
| 27 | 1 | 1600-0052 | Dowel Pin |
| 28 | 1 | 1600-0068 | Dowel Pin |
| 29 | 1 | 3900-0024 | Gerotor |
| 30 | 1 | 0702-2500C1 | Gerotor Housing 1" wide |
| 31 | 1 | 0254-2500C2 | Motor End Plate (includes needle bearing) |
| 32 | 4 | 2270-0039 | Washer |
| 33 | 4 | 2220-0044 | Cap Screw |
| 34 | 1 | 1720-0108 | O-ring |
| 35 | 1 | 3360-0021A | Pressure Port Adapter (includes o-ring) |
| 36 | 1 | 3320-0051A | Tank Port Adapter (includes o-ring) |
| 37 | 1 | 1720-0262 | O-ring |
| 38 | 1 | 3220-0029 | Bypass Adjusting Screw |
| 39 | 1 | 1700-0047 | Gasket |
| 40 | 1 | 2270-0027 | Washer |
| 41 | 1 | 2250-0038 | Lock Nut |

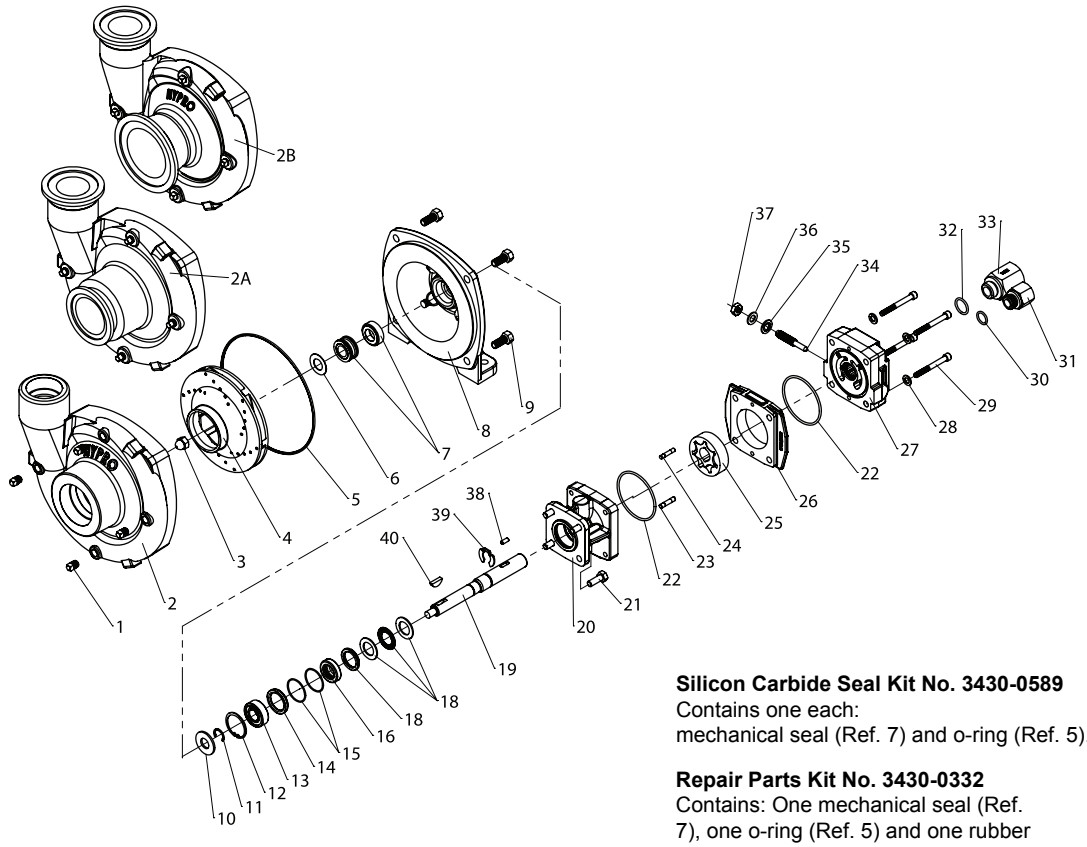


**NOTE:** When ordering parts, give QUANTITY, PART NUMBER, DESCRIPTION, and COMPLETE MODEL NUMBER. Reference numbers are used ONLY to identify parts in the drawing and are NOT to be used as order numbers.

**Parts Kit No. 3430-0748**
Contains: One each ball bearing (Ref. 13), motor shaft seal (Ref. 16), thread seal gasket (Ref. 35), two cartridge o-rings (Ref. 15) and washer (Ref. 36); two each motor housing o-rings (Ref. 22), and port adapter o-rings (Ref. 30 & 32).

**Silicon Carbide Seal Kit No. 3430-0589**
Contains one each:
mechanical seal (Ref. 7) and o-ring (Ref. 5).

**Repair Parts Kit No. 3430-0332**
Contains: One mechanical seal (Ref. 7), one o-ring (Ref. 5) and one rubber gasket (Ref. 6).

**Hydraulic Motor Part Nos.**
2500-0081C (HM1C Models)
2500-0083C (HM3C Models)
2500-0085C (HM5C Models)

| Ref. No. | Qty. Req'd. | Part No. | Description |
|---|---|---|---|
| 1 | 4 | 2406-0007 | Drain/Vent Plug (9306C) |
| 1 | 4 | 2406-0016 | Drain/Vent Plug (9306S) |
| 2 | 1 | 0154-9200C1 | Pump Casing (9306C) |
| 2 | 1 | 0154-9200S1 | Pump Casing (9306S) |
| 2A | 1 | 0157-9200C | Pump Casing (Universal Flange 220x200) |
| 2B | 1 | 0158-9200C | Pump Casing (Universal Flange 300x220 Cast) |
| 2B | 1 | 0158-9200S | Pump Casing (Universal Flange 300x220 S.S.) |
| 3 | 1 | 2253-0002 | Impeller Nut (9306C) |
| 3 | 1 | 2253-0006 | Impeller Nut (9306S) |
| 4 | 1 | 0401-9200P2 | Impeller (Nylon Std. 9306C) |
| 4 | 1 | 0405-9100P2 | Impeller (Polypropylene Optional) (Std. 9306S) |
| 4 | 1 | 0407-9306P | Impeller (GTX Optional) |
| 5 | 1 | 1720-0083 | O-ring |
| 6 | 1 | 1700-0100 | Gasket |
| 7 | 1 | 2120-0009 | Mechanical Seal (Viton/Ceramic) (Std. 9306C) |
| 7 | 1 | 3430-0589 | Mechanical Seal (Silicon Carbide) (Std. 9306S) |
| 8 | 1 | 0750-9300C2 | Mounting Flange (9306C) |
| 8 | 1 | 0756-9300S | Mounting Flange (9306S) |
| 9 | 4 | 2210-0020 | Hex Head Cap Screw (9306C) |
| 9 | 4 | 2210-0125 | Hex Head Cap Screw (9306S) |
| 10 | 1 | 1410-0056 | Slinger Ring |
| 11 | 1 | 1810-0014 | Snap Ring |
| 12 | 1 | 1820-0013 | Retaining Ring |
| 13 | 1 | 2000-0010 | Ball Bearing |
| 14 | 1 | 1410-0131 | Cartridge, Front |
| 15 | 2 | 1720-0268 | O-ring |
| 16 | 1 | 2104-0010 | Lip Seal |
| 17 | 1 | 1410-0130 | Seal Spacer |
| 18 | 1 | 2029-0014 | Thrust Bearing Assembly |
| 19 | 1 | 0533-2500 | Shaft (HM1C/HM5C) |
| 19 | 1 | 0536-2500 | Shaft (HM3C) |
| 20 | 1 | 0150-2500C | Motor Body (includes needle bearing) |

| Ref. No. | Qty. Req'd. | Part No. | Description |
|---|---|---|---|
| 21 | 4 | 2210-0005 | Hex Head Cap Screw |
| 22 | 2 | 1720-0110 | O-ring |
| 23 | 1 | 1600-0044 | Dowel Pin (HM1C/HM5C) |
| 23 | 1 | 1600-0052 | Dowel Pin (HM3C) |
| 24 | 1 | 1600-0037 | Dowel Pin (HM1C/HM5C) |
| 24 | 1 | 1600-0068 | Dowel Pin (HM3C) |
| 25 | 1 | 3900-0022 | Gerotor (HM1C) |
| 25 | 1 | 3900-0024 | Gerotor (HM3C) |
| 25 | 1 | 3900-0048 | Gerotor (HM5C) |
| 26 | 1 | 0700-2500C1 | Gerotor Housing (HM1C Models) 1/2" wide |
| 26 | 1 | 0702-2500C1 | Gerotor Housing (HM3C Models) 1" wide |
| 26 | 1 | 0704-2500C1 | Gerotor Housing (HM5C Models) 5/8" wide |
| 27 | 1 | 0254-2500C2 | Motor End Plate (includes needle bearing) |
| 28 | 4 | 2270-0039 | Washer |
| 29 | 4 | 2220-0021 | Cap Screw (HM1C Models) |
| 29 | 4 | 2220-0044 | Cap Screw (HM3C Models) |
| 29 | 4 | 2220-0032 | Cap Screw (HM5C Models) |
| 30 | 1 | 1720-0108 | O-ring |
| 31 | 1 | 3360-0021A | Pressure Port Adapter (includes o-ring) |
| 32 | 1 | 1720-0262 | O-ring |
| 33 | 1 | 3320-0051A | Tank Port Adapter (includes o-ring) |
| 34 | 1 | 3220-0029 | Bypass Adjusting Screw |
| 35 | 1 | 1700-0047 | Gasket |
| 36 | 1 | 2270-0027 | Washer |
| 37 | 1 | 2250-0038 | Lock Nut |
| 38 | 1 | 1610-0031 | Roll Pin (HM1C / HM5C) |
| 38 | 1 | 1610-0055 | Roll Pin (HM3C) |
| 39 | 1 | 1810-0026 | Snap Ring |
| 40 | 1 | 1610-0012 | Woodruff Key (9306C) |
| 40 | 1 | 04432 | Woodruff Key (9306S) |

# Notes

# Limited Warranty on Hypro/SHURflo Agricultural Pumps & Accessories

Hypro/SHURflo (hereafter, "Hypro") agricultural products are warranted to be free of defects in material and workmanship under normal use for the time periods listed below, with proof of purchase.

- Pumps: one (1) year from the date of manufacture, or one (1) year of use. This limited warranty will not exceed two (2) years, in any event.
- Accessories: ninety (90) days of use.

This limited warranty will not apply to products that were improperly installed, misapplied, damaged, altered, or incompatible with fluids or components not manufactured by Hypro. All warranty considerations are governed by Hypro's written return policy.

Hypro's obligation under this limited warranty policy is limited to the repair or replacement of the product. All returns will be tested per Hypro's factory criteria. Products found not defective (under the terms of this limited warranty) are subject to charges paid by the returnee for the testing and packaging of "tested good" non-warranty returns.

No credit or labor allowances will be given for products returned as defective. Warranty replacement will be shipped on a freight allowed basis. Hypro reserves the right to choose the method of transportation.

This limited warranty is in lieu of all other warranties, expressed or implied, and no other person is authorized to give any other warranty or assume obligation or liability on Hypro's behalf. Hypro shall not be liable for any labor, damage or other expense, nor shall Hypro be liable for any indirect, incidental or consequential damages of any kind incurred by the reason of the use or sale of any defective product. This limited warranty covers agricultural products distributed within the United States of America. Other world market areas should consult with the actual distributor for any deviation from this document.

## Return Procedures

All products must be flushed of any chemical (ref. OSHA section 1910.1200 (d) (e) (f) (g) (h)) and hazardous chemicals must be labeled/tagged before being shipped* to Hypro for service or warranty consideration. Hypro reserves the right to request a Material Safety Data Sheet from the returnee for any pump/product it deems necessary. Hypro reserves the right to "disposition as scrap" products returned which contain unknown fluids. Hypro reserves the right to charge the returnee for any and all costs incurred for chemical testing, and proper disposal of components containing unknown fluids. Hypro requests this in order to protect the environment and personnel from the hazards of handling unknown fluids.

Be prepared to give Hypro full details of the problem, including the model number, date of purchase, and from whom you purchased your product. Hypro may request additional information, and may require a sketch to illustrate the problem.

**Contact Hypro Service Department at 800-468-3428 to receive a Return Merchandise Authorization number (RMA#).** Returns are to be shipped with the RMA number clearly marked on the outside of the package. Hypro shall not be liable for freight damage incurred during shipping. Please package all returns carefully. All products returned for warranty work should be sent **shipping charges prepaid** to:

HYPRO/PENTAIR
Attention: Service Department
375 Fifth Avenue NW
New Brighton, MN 55112

For technical or application assistance, call the **Hypro Technical/Application number: 800-445-8360**, or send an email to: **technical@hypropumps.com**. To obtain service or warranty assistance, call the **Hypro Service and Warranty number**: **800-468-3428**; or send a fax to the **Hypro Service and Warranty FAX**: **651-766-6618**.

*Carriers, including U.S.P.S., airlines, UPS, ground freight, etc., require specific identification of any hazardous material being shipped. Failure to do so may result in a substantial fine and/or prison term. Check with your shipping company for specific instructions.

Note: This warranty does not apply to Hypro Pump Kit Model 1538, 1551, 1538-SP and 1551-SP. This is because the user could incorrectly assemble the parts and cause the pump to work improperly.

PENTAIR

375 Fifth Avenue NW • New Brighton, MN 55112
Phone: (651) 766-6300 • 800-424-9776 • Fax: 800-323-6496
**www.hypropumps.com**

Hypro 2012
Printed in USA